mod. CAB700TN | cod. 06200000

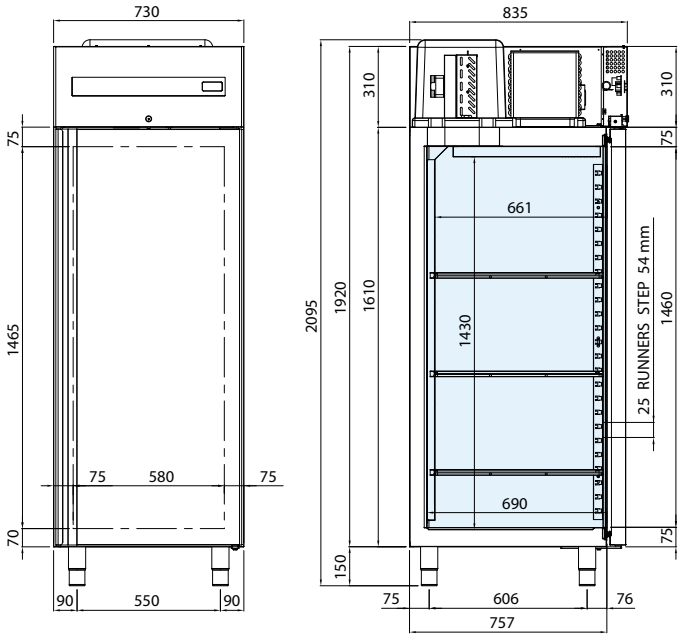

EN TECHNICAL SPECIFICATIONS

Available temperature (°C)	Dimensions W x D x H (mm)	Packaging dimensions W x D x H (mm)	Refrigerant gas	Net volum (L)	Climate class	Energy class	Power consumption (W)	Supply voltage	Annual consumption (kWh/year)
-2 / +8	730 x 835 x 2095	800 x 900 x 2300	R290	465	5	B	205	220-240 V / 50 Hz	402

EN TECHNICAL AND FUNCTIONAL FEATURES

- Refrigerated cabinet equipped with a monobloc unit that is tropicalized and easily removable from the body, with forced ventilated refrigeration with R290 gas
- Structure entirely in steel. Interior, walls and door in AISI 304 stainless steel
- Tested with external working environment temperatures up to 43 °C, efficiency equivalent to climate class 5
- 75 mm insulation of high pressure injected HFO polyurethane with a density of 42 kg/m³
- Temperature detection by means of a thermistor sensor (NTC probe)
- Operation control through a digital "touch" panel
- Automatic defrosting by hot gas
- Automatic evaporation of condensate water by means of a heat exchanger in copper
- Reversible opening doors with automatic closing and a fixed opening position of 100°
- Hinges with automatic closing system
- Easily removable magnetic gaskets
- U-shaped guides and adjustable and extractable racks for grids
- Rounded internal corners for quick and easy cleaning
- Evaporator painted for cataphoresis with high corrosion resistance
- 3 GN 2/1 polyethylene grids as standard
- Height-adjustable stainless steel feet
- Lock with key and light placed under the control panel

OPTIONAL

- Stainless steel couple of "U" runners
- Stainless steel grids GN 2/1
- Polyethylene tray 600 x 400 mm
- Stainless steel grids 600 x 400 mm
- Couple "L" runners for grids 600 x 400 mm
- Kit 600 x 400 mm
- Led light
- Set of 4 castors

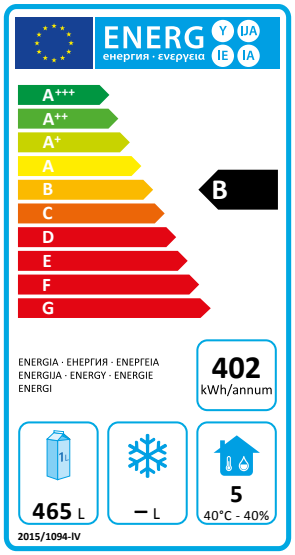

mod. CAB700BT | cod. 06200010

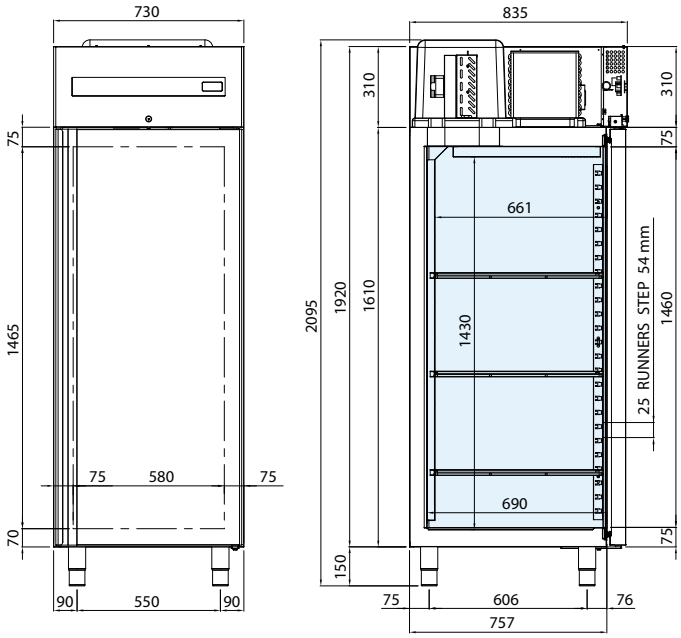

EN TECHNICAL SPECIFICATIONS

Available temperature (°C)	Dimensions W x D x H (mm)	Packaging dimensions W x D x H (mm)	Refrigerant gas	Net volum (L)	Climate class	Energy class	Power consumption (W)	Supply voltage	Annual consumption (kWh/year)
–18 / –22	730 x 835 x 2095	800 x 900 x 2300	R290	465	5	D	530	220-240 V / 50 Hz	2117

EN TECHNICAL AND FUNCTIONAL FEATURES

- Refrigerated cabinet equipped with a monobloc unit that is tropicalized and easily removable from the body, with forced ventilated refrigeration with R290 gas
- Structure entirely in steel. Interior, walls and door in AISI 304 stainless steel
- Tested with external working environment temperatures up to 43 °C, efficiency equivalent to climate class 5
- 75 mm insulation of high pressure injected HFO polyurethane with a density of 42 kg/m³
- Temperature detection by means of a thermistor sensor (NTC probe)
- Operation control through a digital "touch" panel
- Automatic defrosting by hot gas
- Automatic evaporation of condensate water by means of a heat exchanger in copper
- Reversible opening doors with automatic closing and a fixed opening position of 100°
- Hinges with automatic closing system
- Easily removable magnetic gaskets
- U-shaped guides and adjustable and extractable racks for grids
- Rounded internal corners for quick and easy cleaning
- Evaporator painted for cataphoresis with high corrosion resistance
- 3 GN 2/1 polyethylene grids as standard
- Height-adjustable stainless steel feet
- Lock with key and light placed under the control panel

OPTIONAL

- Stainless steel couple of "U" runners
- Stainless steel grids GN 2/1
- Polyethylene tray 600 x 400 mm
- Stainless steel grids 600 x 400 mm
- Couple "L" runners for grids 600 x 400 mm
- Kit 600 x 400 mm
- Led light
- Set of 4 castors

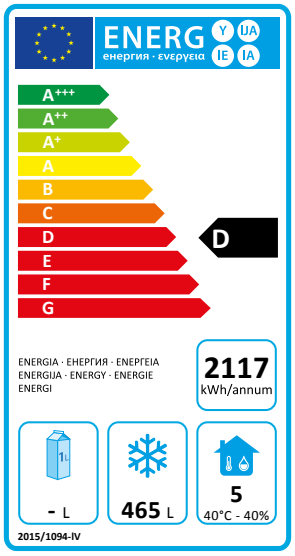

mod. CAB700TN2P | cod. 06200020

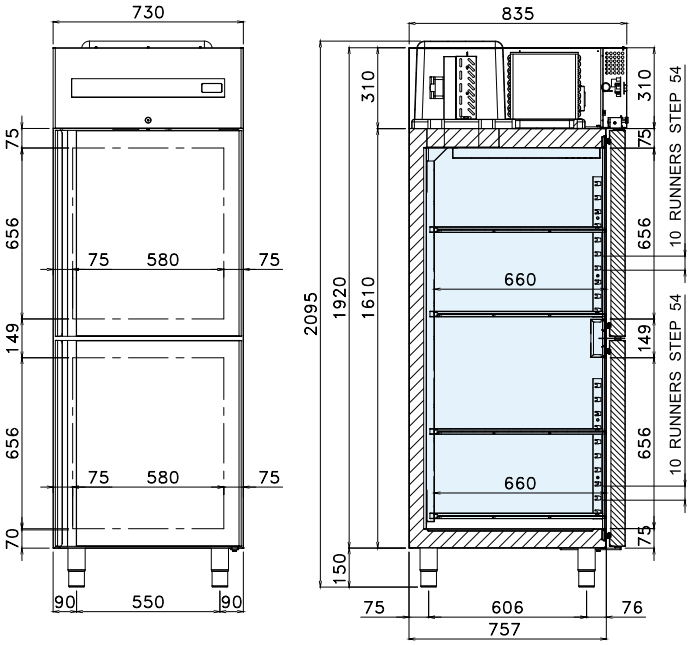

EN TECHNICAL SPECIFICATIONS

Available temperature (°C)	Dimensions W x D x H (mm)	Packaging dimensions W x D x H (mm)	Refrigerant gas	Net volum (L)	Climate class	Energy class	Power consumption (W)	Supply voltage	Annual consumption (kWh/year)
-2 / +8	730 x 835 x 2095	800 x 900 x 2300	R290	465	5	B	205	220-240 V / 50 Hz	442

EN TECHNICAL AND FUNCTIONAL FEATURES

- Refrigerated cabinet equipped with a monobloc unit that is tropicalized and easily removable from the body, with forced ventilated refrigeration with R290 gas
- Structure entirely in steel. Interior, walls and door in AISI 304 stainless steel
- Tested with external working environment temperatures up to 43 °C, efficiency equivalent to climate class 5
- 75 mm insulation of high pressure injected HFO polyurethane with a density of 42 kg/m³
- Temperature detection by means of a thermistor sensor (NTC probe)
- Operation control through a digital "touch" panel
- Automatic defrosting by hot gas
- Automatic evaporation of condensate water by means of a heat exchanger in copper
- Doors with automatic closing and a fixed opening position of 100°
- Hinges with automatic closing system
- Easily removable magnetic gaskets
- U-shaped guides and adjustable and extractable racks for grids
- Rounded internal corners for quick and easy cleaning
- Evaporator painted for cataphoresis with high corrosion resistance
- 4 GN 2/1 polyethylene grids as standard
- Height-adjustable stainless steel feet
- Lock with key and light placed under the control panel

OPTIONAL

- Stainless steel couple of "U" runners
- Stainless steel grids GN 2/1
- Polyethylene tray 600 x 400 mm
- Stainless steel grids 600 x 400 mm
- Couple "L" runners for grids 600 x 400 mm
- Kit 600 x 400 mm
- Led light
- Set of 4 castors

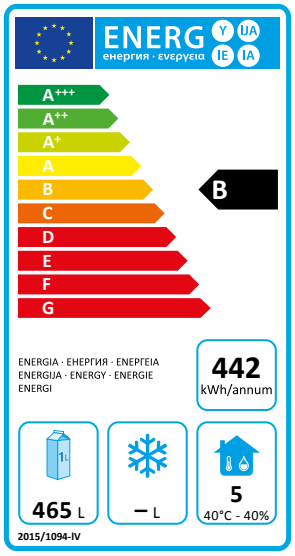

mod. CAB700BT2P | cod. 06200030

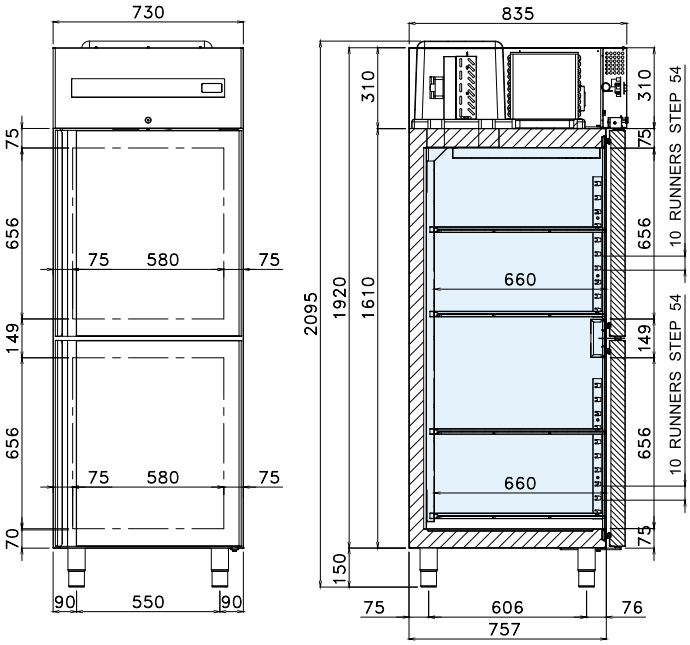

EN TECHNICAL SPECIFICATIONS

Available temperature (°C)	Dimensions W x D x H (mm)	Packaging dimensions W x D x H (mm)	Refrigerant gas	Net volum (L)	Climate class	Energy class	Power consumption (W)	Supply voltage	Annual consumption (kWh/year)
–18 / –22	730 x 835 x 2095	800 x 900 x 2300	R290	465	5	D	530	220-240 V / 50 Hz	2435

EN TECHNICAL AND FUNCTIONAL FEATURES

- Refrigerated cabinet equipped with a monobloc unit that is tropicalized and easily removable from the body, with forced ventilated refrigeration with R290 gas
- Structure entirely in steel. Interior, walls and door in AISI 304 stainless steel
- Tested with external working environment temperatures up to 43 °C, efficiency equivalent to climate class 5
- 75 mm insulation of high pressure injected HFO polyurethane with a density of 42 kg/m³
- Temperature detection by means of a thermistor sensor (NTC probe)
- Operation control through a digital "touch" panel
- Automatic defrosting by hot gas
- Automatic evaporation of condensate water by means of a heat exchanger in copper
- Doors with automatic closing and a fixed opening position of 100°
- Hinges with automatic closing system
- Easily removable magnetic gaskets
- U-shaped guides and adjustable and extractable racks for grids
- Rounded internal corners for quick and easy cleaning
- Evaporator painted for cataphoresis with high corrosion resistance
- 4 GN 2/1 polyethylene grids as standard
- Height-adjustable stainless steel feet
- Lock with key and light placed under the control panel

OPTIONAL

- Stainless steel couple of "U" runners
- Stainless steel grid GN 2/1
- Polyethylene tray 600 x 400 mm
- Stainless steel grid 600 x 400 mm
- Couple "L" runners for grid 600 x 400 mm
- Kit 600 x 400 mm
- Led light
- Set of 4 castors

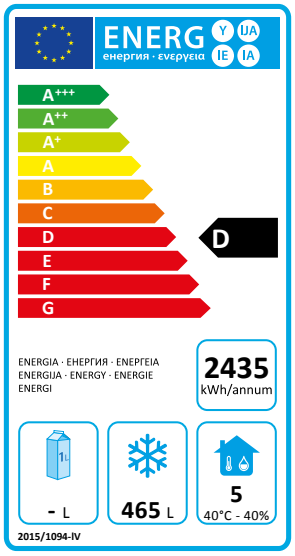

mod. CAB1400TN | cod. 06220000

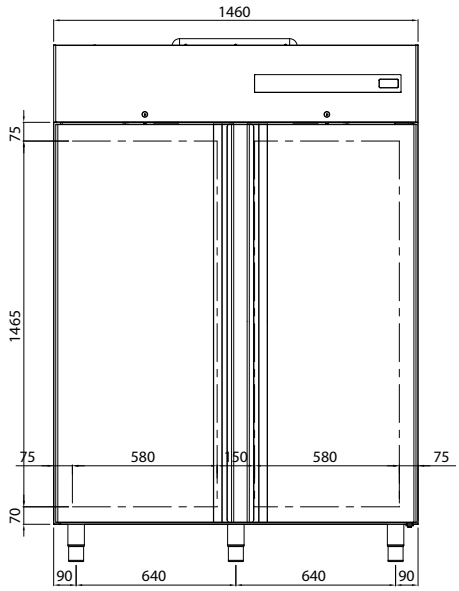

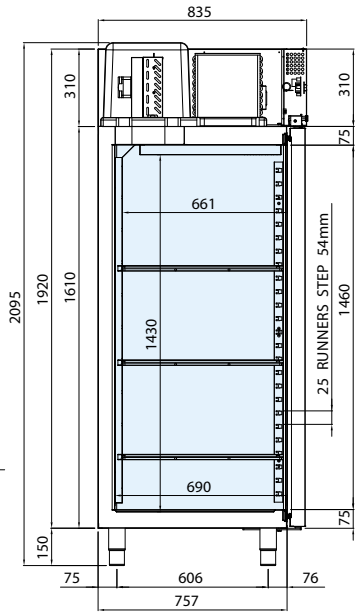

EN TECHNICAL SPECIFICATIONS

Available temperature (°C)	Dimensions W x D x H (mm)	Packaging dimensions W x D x H (mm)	Refrigerant gas	Net volum (L)	Climate class	Energy class	Power consumption (W)	Supply voltage	Annual consumption (kWh/year)
-2 / +8	1460 x 835 x 2095	1500 x 900 x 2300	R290	930	5	C	320	220-240 V / 50 Hz	949

EN TECHNICAL AND FUNCTIONAL FEATURES

- Refrigerated cabinet equipped with a monobloc unit that is tropicalized and easily removable from the body, with forced ventilated refrigeration with R290 gas
- Structure entirely in steel. Interior, walls and door in AISI 304 stainless steel
- Tested with external working environment temperatures up to 43 °C, efficiency equivalent to climate class 5
- 75 mm insulation of high pressure injected HFO polyurethane with a density of 42 kg/m^3
- Temperature detection by means of a thermistor sensor (NTC probe)
- Operation control through a digital "touch" panel
- Automatic defrosting by hot gas
- Automatic evaporation of condensate water by means of a heat exchanger in copper
- Doors with automatic closing and a fixed opening position of 100°
- Hinges with automatic closing system
- Easily removable magnetic gaskets
- U-shaped guides and adjustable and extractable racks for grids
- Rounded internal corners for quick and easy cleaning
- Evaporator painted for cataphoresis with high corrosion resistance
- 6 GN 2/1 polyethylene grids as standard
- Height-adjustable stainless steel feet
- Lock with key and light placed under the control panel

OPTIONAL

- Stainless steel couple of "U" runners
- Stainless steel grid GN 2/1
- Polyethylene tray 600 x 400 mm
- Stainless steel grid 600 x 400 mm
- Couple "L" runners for grid 600 x 400 mm
- Kit 600 x 400 mm
- Led light
- Set of 5 castors

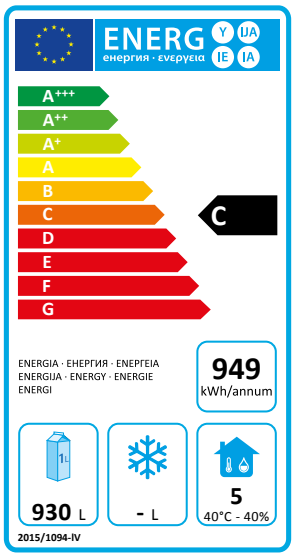

mod. CAB1400BT | cod. 06220010

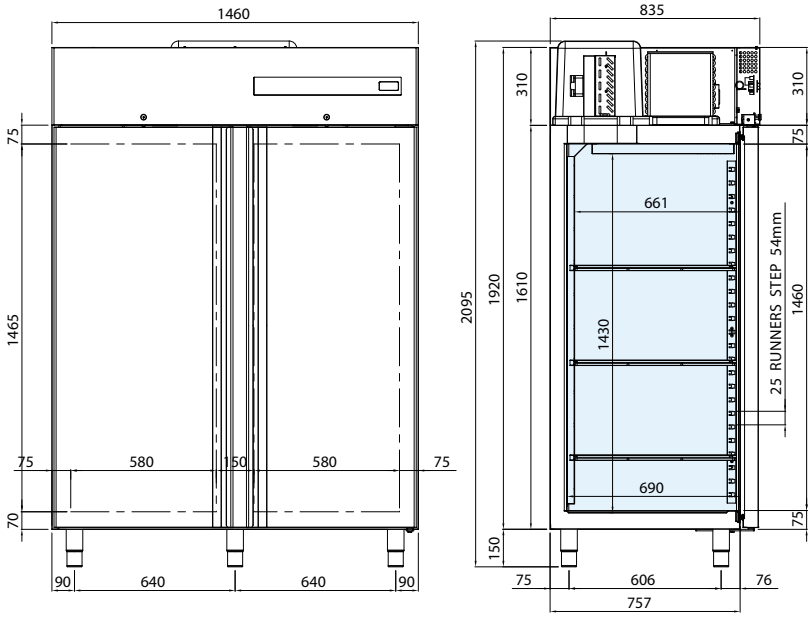

EN TECHNICAL SPECIFICATIONS

Available temperature (°C)	Dimensions W x D x H (mm)	Packaging dimensions W x D x H (mm)	Refrigerant gas	Net volum (L)	Climate class	Energy class	Power consumption (W)	Supply voltage	Annual consumption (kWh/year)
–18 / –22	1460 x 835 x 2095	1500 x 900 x 2300	R290	930	5	D	840	220-240 V / 50 Hz	4234

EN TECHNICAL AND FUNCTIONAL FEATURES

- Refrigerated cabinet equipped with a monobloc unit that is tropicalized and easily removable from the body, with forced ventilated refrigeration with R290 gas
- Structure entirely in steel. Interior, walls and door in AISI 304 stainless steel
- Tested with external working environment temperatures up to 43 °C, efficiency equivalent to climate class 5
- 75 mm insulation of high pressure injected HFO polyurethane with a density of 42 kg/m³
- Temperature detection by means of a thermistor sensor (NTC probe)
- Operation control through a digital "touch" panel
- Automatic defrosting by hot gas
- Automatic evaporation of condensate water by means of a heat exchanger in copper
- Doors with automatic closing and a fixed opening position of 100°
- Hinges with automatic closing system
- Easily removable magnetic gaskets
- U-shaped guides and adjustable and extractable racks for grids
- Rounded internal corners for quick and easy cleaning
- Evaporator painted for cataphoresis with high corrosion resistance
- 6 GN 2/1 polyethylene grids as standard
- Height-adjustable stainless steel feet
- Lock with key and light placed under the control panel

OPTIONAL

- Stainless steel couple of "U" runners
- Stainless steel grid GN 2/1
- Polyethylene tray 600 x 400 mm
- Stainless steel grid 600 x 400 mm
- Couple "L" runners for grid 600 x 400 mm
- Kit 600 x 400 mm
- Led light
- Set of 5 castors

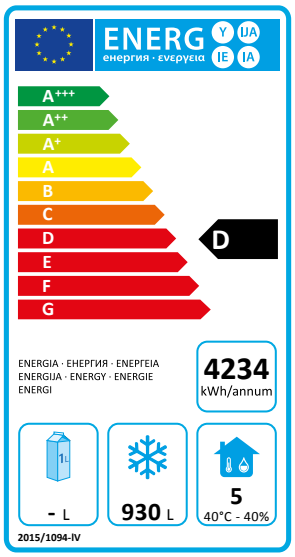

mod. CAB1400TN3P | cod. 06220020

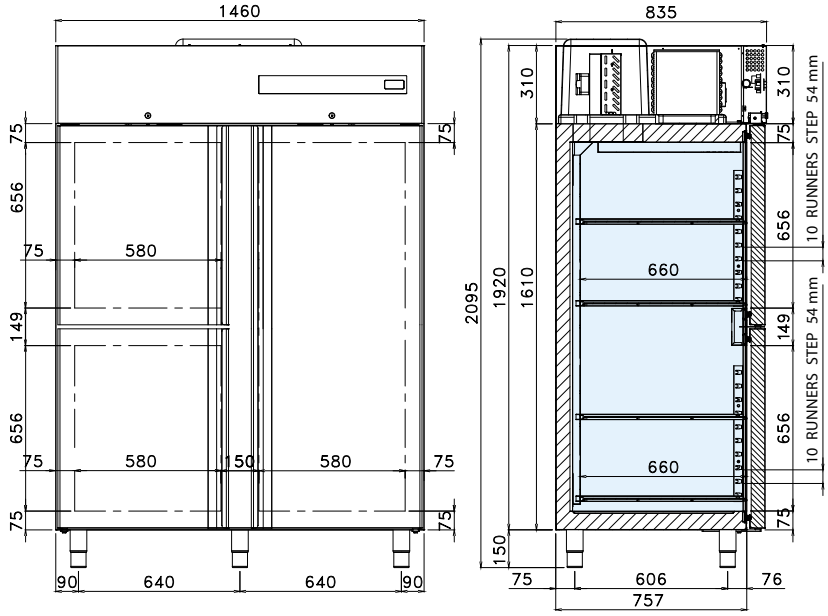

EN TECHNICAL SPECIFICATIONS

Available temperature (°C)	Dimensions W x D x H (mm)	Packaging dimensions W x D x H (mm)	Refrigerant gas	Net volum (L)	Climate class	Energy class	Power consumption (W)	Supply voltage	Annual consumption (kWh/year)
-2 / +8	1460 x 835 x 2095	1500 x 900 x 2300	R290	930	5	C	320	220-240 V / 50 Hz	1059

EN TECHNICAL AND FUNCTIONAL FEATURES

- Refrigerated cabinet equipped with a monobloc unit that is tropicalized and easily removable from the body, with forced ventilated refrigeration with R290 gas
- Structure entirely in steel. Interior, walls and door in AISI 304 stainless steel
- Tested with external working environment temperatures up to 43 °C, efficiency equivalent to climate class 5
- 75 mm insulation of high pressure injected HFO polyurethane with a density of 42 kg/m³
- Temperature detection by means of a thermistor sensor (NTC probe)
- Operation control through a digital "touch" panel
- Automatic defrosting by hot gas
- Automatic evaporation of condensate water by means of a heat exchanger in copper
- Doors with automatic closing and a fixed opening position of 100°
- Hinges with automatic closing system
- Easily removable magnetic gaskets
- U-shaped guides and adjustable and extractable racks for grids
- Rounded internal corners for quick and easy cleaning
- Evaporator painted for cataphoresis with high corrosion resistance
- 7 GN 2/1 polyethylene grids as standard
- Height-adjustable stainless steel feet
- Lock with key and light placed under the control panel

OPTIONAL

- Stainless steel couple of "U" runners
- Stainless steel grid GN 2/1
- Polyethylene tray 600 x 400 mm
- Stainless steel grid 600 x 400 mm
- Couple "L" runners for grid 600 x 400 mm
- Kit 600 x 400 mm
- Led light
- Set of 5 castors

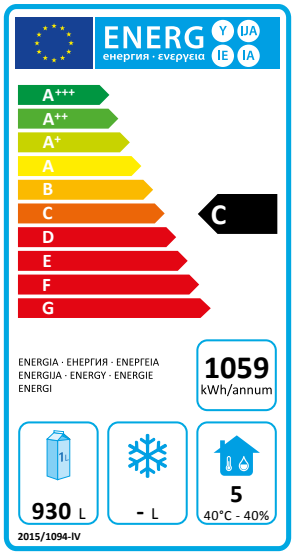

mod. CAB1400BT3P | cod. 06220030

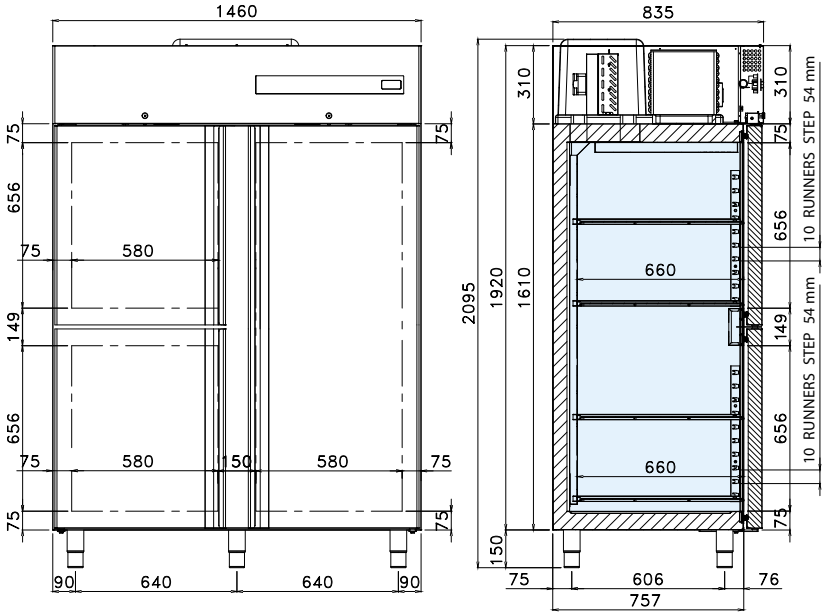

EN TECHNICAL SPECIFICATIONS

Available temperature (°C)	Dimensions W x D x H (mm)	Packaging dimensions W x D x H (mm)	Refrigerant gas	Net volum (L)	Climate class	Energy class	Power consumption (W)	Supply voltage	Annual consumption (kWh/year)
–18 / –22	1460 x 835 x 2095	1500 x 900 x 2300	R290	930	5	E	840	220-240 V / 50 Hz	4657

EN TECHNICAL AND FUNCTIONAL FEATURES

- Refrigerated cabinet equipped with a monobloc unit that is tropicalized and easily removable from the body, with forced ventilated refrigeration with R290 gas
- Structure entirely in steel. Interior, walls and door in AISI 304 stainless steel
- Tested with external working environment temperatures up to 43 °C, efficiency equivalent to climate class 5
- 75 mm insulation of high pressure injected HFO polyurethane with a density of 42 kg/m³
- Temperature detection by means of a thermistor sensor (NTC probe)
- Operation control through a digital "touch" panel
- Automatic defrosting by hot gas
- Automatic evaporation of condensate water by means of a heat exchanger in copper
- Doors with automatic closing and a fixed opening position of 100°
- Hinges with automatic closing system
- Easily removable magnetic gaskets
- U-shaped guides and adjustable and extractable racks for grids
- Rounded internal corners for quick and easy cleaning
- Evaporator painted for cataphoresis with high corrosion resistance
- 7 GN 2/1 polyethylene grids as standard
- Height-adjustable stainless steel feet
- Lock with key and light placed under the control panel

OPTIONAL

- Stainless steel couple of "U" runners
- Stainless steel grid GN 2/1
- Polyethylene tray 600 x 400 mm
- Stainless steel grid 600 x 400 mm
- Couple "L" runners for grid 600 x 400 mm
- Kit 600 x 400 mm
- Led light
- Set of 5 castors

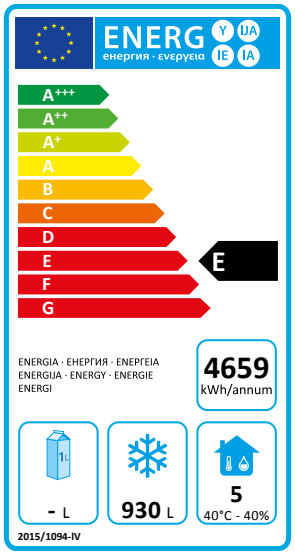

mod. CAB1400TN4P | cod. 06220040

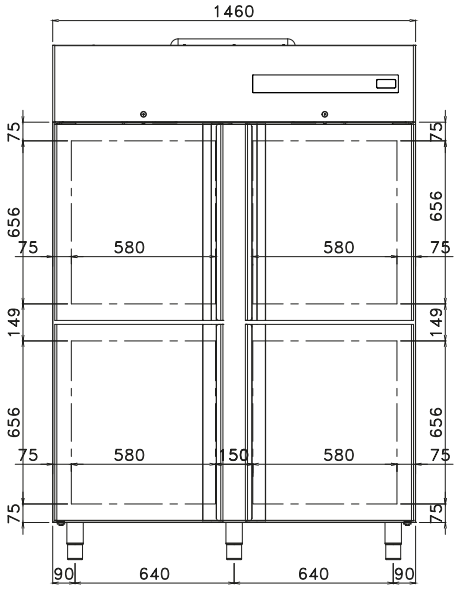

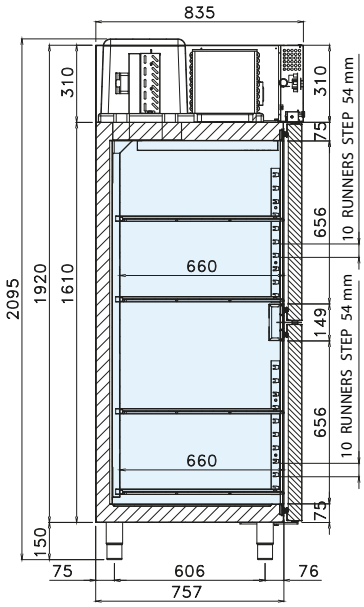

EN TECHNICAL SPECIFICATIONS

Available temperature (°C)	Dimensions W x D x H (mm)	Packaging dimensions W x D x H (mm)	Refrigerant gas	Net volum (L)	Climate class	Energy class	Power consumption (W)	Supply voltage	Annual consumption (kWh/year)
-2 / +8	1460 x 835 x 2095	1500 x 900 x 2300	R290	930	5	D	320	220-240 V / 50 Hz	1095

EN TECHNICAL AND FUNCTIONAL FEATURES

- Refrigerated cabinet equipped with a monobloc unit that is tropicalized and easily removable from the body, with forced ventilated refrigeration with R290 gas
- Structure entirely in steel. Interior, walls and door in AISI 304 stainless steel
- Tested with external working environment temperatures up to 43 °C, efficiency equivalent to climate class 5
- 75 mm insulation of high pressure injected HFO polyurethane with a density of 42 kg/m³
- Temperature detection by means of a thermistor sensor (NTC probe)
- Operation control through a digital "touch" panel
- Automatic defrosting by hot gas
- Automatic evaporation of condensate water by means of a heat exchanger in copper
- Doors with automatic closing and a fixed opening position of 100°
- Hinges with automatic closing system
- Easily removable magnetic gaskets
- U-shaped guides and adjustable and extractable racks for grids
- Rounded internal corners for quick and easy cleaning
- Evaporator painted for cataphoresis with high corrosion resistance
- 8 GN 2/1 polyethylene grids as standard
- Height-adjustable stainless steel feet
- Lock with key and light placed under the control panel

OPTIONAL

- Stainless steel couple of "U" runners
- Stainless steel grid GN 2/1
- Polyethylene tray 600 x 400 mm
- Stainless steel grid 600 x 400 mm
- Couple "L" runners for grid 600 x 400 mm
- Kit 600 x 400 mm
- Led light
- Set of 5 castors

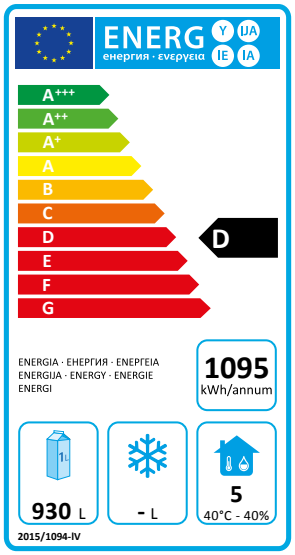

mod. CAB1400BT4P | cod. 06220050

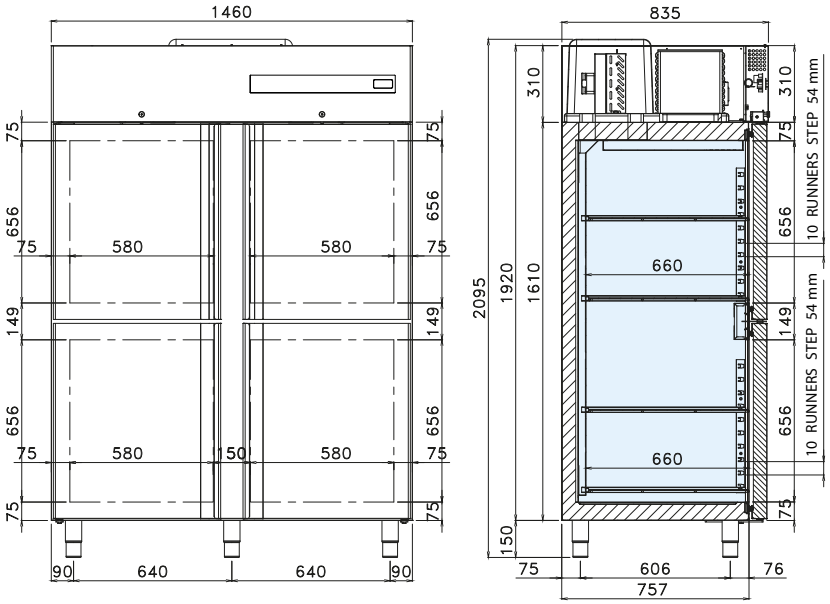

EN TECHNICAL SPECIFICATIONS

Available temperature (°C)	Dimensions W x D x H (mm)	Packaging dimensions W x D x H (mm)	Refrigerant gas	Net volum (L)	Climate class	Energy class	Power consumption (W)	Supply voltage	Annual consumption (kWh/year)
–18 / –22	1460 x 835 x 2095	1500 x 900 x 2300	R290	930	5	E	840	220-240 V / 50 Hz	4869

EN TECHNICAL AND FUNCTIONAL FEATURES

- Refrigerated cabinet equipped with a monobloc unit that is tropicalized and easily removable from the body, with forced ventilated refrigeration with R290 gas
- Structure entirely in steel. Interior, walls and door in AISI 304 stainless steel
- Tested with external working environment temperatures up to 43 °C, efficiency equivalent to climate class 5
- 75 mm insulation of high pressure injected HFO polyurethane with a density of 42 kg/m³
- Temperature detection by means of a thermistor sensor (NTC probe)
- Operation control through a digital "touch" panel
- Automatic defrosting by hot gas
- Automatic evaporation of condensate water by means of a heat exchanger in copper
- Doors with automatic closing and a fixed opening position of 100°
- Hinges with automatic closing system
- Easily removable magnetic gaskets
- U-shaped guides and adjustable and extractable racks for grids
- Rounded internal corners for quick and easy cleaning
- Evaporator painted for cataphoresis with high corrosion resistance
- 8 GN 2/1 polyethylene grids as standard
- Height-adjustable stainless steel feet
- Lock with key and light placed under the control panel

OPTIONAL

- Stainless steel couple of "U" runners
- Stainless steel grid GN 2/1
- Polyethylene tray 600 x 400 mm
- Stainless steel grid 600 x 400 mm
- Couple "L" runners for grid 600 x 400 mm
- Kit 600 x 400 mm
- Led light
- Set of 5 castors

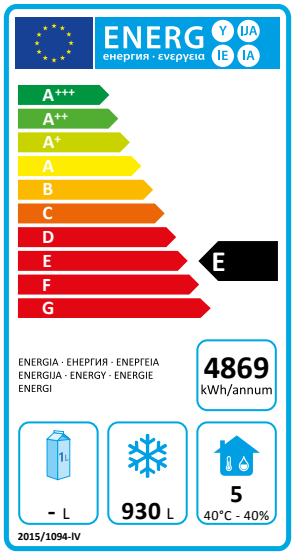

mod. CAB700GTN | cod. 06240000

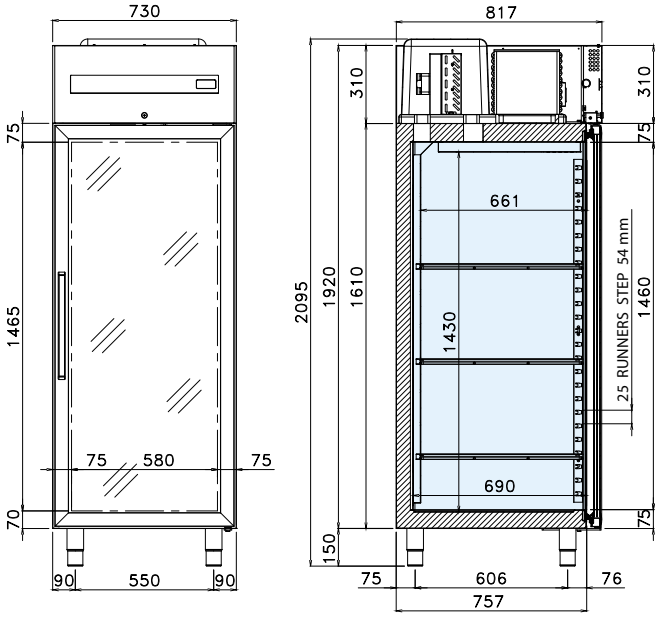

EN TECHNICAL SPECIFICATIONS

Available temperature (°C)	Dimensions W x D x H (mm)	Packaging dimensions W x D x H (mm)	Refrigerant gas	Net volum (L)	Climate class	Energy class	Power consumption (W)	Supply voltage	Annual consumption (kWh/year)
-2 / +8	730 x 835 x 2095	800 x 900 x 2300	R290	465	4	D	205	220-240 V / 50 Hz	730

EN TECHNICAL AND FUNCTIONAL FEATURES

- Refrigerated cabinet equipped with a monobloc unit that is tropicalized and easily removable from the body, with forced ventilated refrigeration with R290 gas
- Structure entirely in steel. Interior, walls and door in AISI 304 stainless steel
- Tested with external working environment temperatures up to 30 °C, efficiency equivalent to climate class 4
- 75 mm insulation of high pressure injected HFO polyurethane with a density of 42 kg/m³
- Temperature detection by means of a thermistor sensor (NTC probe)
- Operation control through a digital "touch" panel
- Automatic defrosting by hot gas
- Automatic evaporation of condensate water by means of a heat exchanger in copper
- Reversible opening doors with automatic closing and a fixed opening position of 100°
- Hinges with automatic closing system
- Easily removable magnetic gaskets
- U-shaped guides and adjustable and extractable racks for grids
- Rounded internal corners for quick and easy cleaning
- Evaporator painted for cataphoresis with high corrosion resistance
- Internal Led lighting as standard
- 3 GN 2/1 polyethylene grids as standard
- Height-adjustable stainless steel feet
- Lock with key

OPTIONAL

- Stainless steel couple of "U" runners
- Stainless steel grid GN 2/1
- Polyethylene tray 600 x 400 mm
- Stainless steel grid 600 x 400 mm
- Couple "L" runners for grid 600 x 400 mm
- Kit 600 x 400 mm
- Set of 4 castors

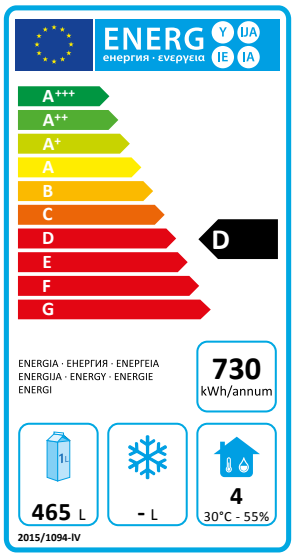

mod. CAB700GBT | cod. 06240010

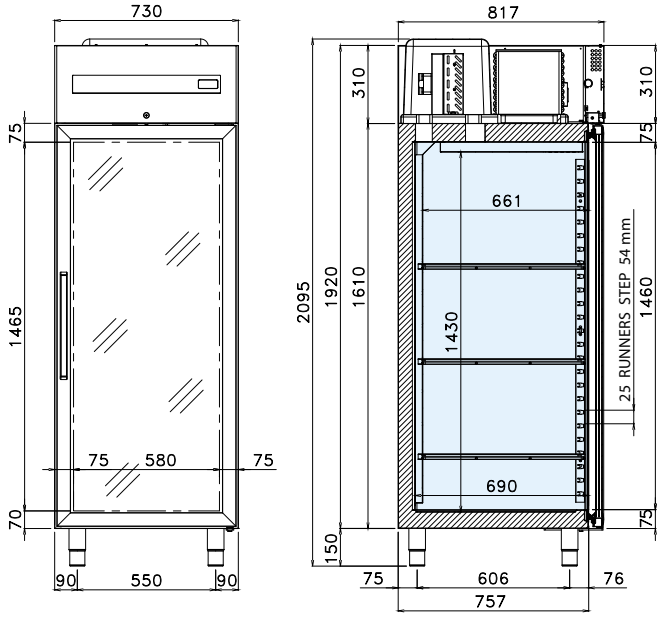

EN TECHNICAL SPECIFICATIONS

Available temperature (°C)	Dimensions W x D x H (mm)	Packaging dimensions W x D x H (mm)	Refrigerant gas	Net volum (L)	Climate class	Energy class	Power consumption (W)	Supply voltage	Annual consumption (kWh/year)
–18 / –22	730 x 835 x 2095	800 x 900 x 2300	R290	465	4	E	530	220-240 V / 50 Hz	2957

EN TECHNICAL AND FUNCTIONAL FEATURES

- Refrigerated cabinet equipped with a monobloc unit that is tropicalized and easily removable from the body, with forced ventilated refrigeration with R290 gas
- Structure entirely in steel. Interior, walls and door in AISI 304 stainless steel
- Tested with external working environment temperatures up to 30 °C, efficiency equivalent to climate class 4
- 75 mm insulation of high pressure injected HFO polyurethane with a density of 42 kg/m³
- Temperature detection by means of a thermistor sensor (NTC probe)
- Operation control through a digital "touch" panel
- Automatic defrosting by hot gas
- Automatic evaporation of condensate water by means of a heat exchanger in copper
- Reversible opening doors with automatic closing and a fixed opening position of 100°
- Hinges with automatic closing system
- Easily removable magnetic gaskets
- U-shaped guides and adjustable and extractable racks for grids
- Rounded internal corners for quick and easy cleaning
- Evaporator painted for cataphoresis with high corrosion resistance
- Internal Led lighting as standard
- 3 GN 2/1 polyethylene grids as standard
- Height-adjustable stainless steel feet
- Lock with key

OPTIONAL

- Stainless steel couple of "U" runners
- Stainless steel grid GN 2/1
- Polyethylene tray 600 x 400 mm
- Stainless steel grid 600 x 400 mm
- Couple "L" runners for grid 600 x 400 mm
- Kit 600 x 400 mm
- Set of 4 castors

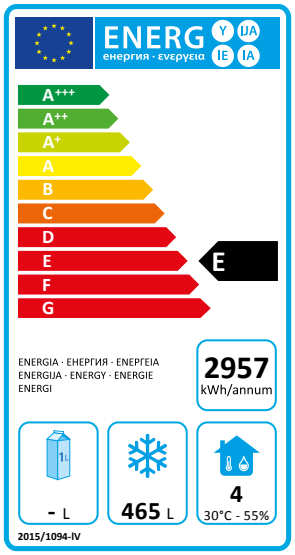

mod. CAB1400GTN | cod. 06260000

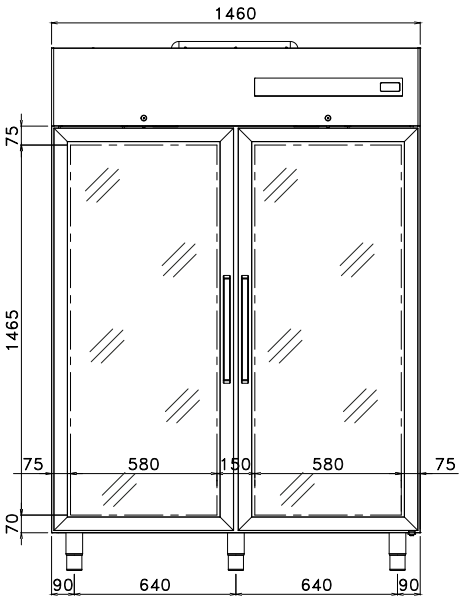

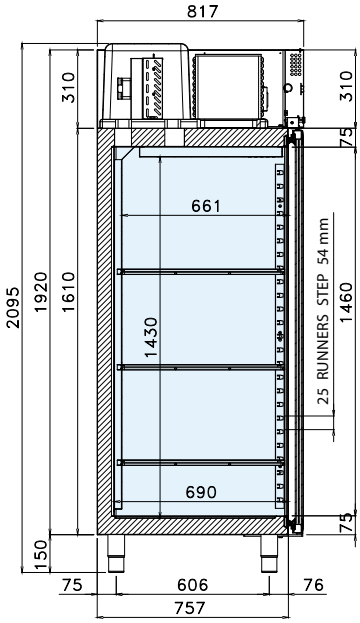

EN TECHNICAL SPECIFICATIONS

Available temperature (°C)	Dimensions W x D x H (mm)	Packaging dimensions W x D x H (mm)	Refrigerant gas	Net volum (L)	Climate class	Energy class	Power consumption (W)	Supply voltage	Annual consumption (kWh/year)
-2 / +8	1460 x 835 x 2095	1500 x 900 x 2300	R290	930	4	E	320	220-240 V / 50 Hz	1606

EN TECHNICAL AND FUNCTIONAL FEATURES

- Refrigerated cabinet equipped with a monobloc unit that is tropicalized and easily removable from the body, with forced ventilated refrigeration with R290 gas
- Structure entirely in steel. Interior, walls and door in AISI 304 stainless steel
- Tested with external working environment temperatures up to 30 °C, efficiency equivalent to climate class 4
- 75 mm insulation of high pressure injected HFO polyurethane with a density of 42 kg/m³
- Temperature detection by means of a thermistor sensor (NTC probe)
- Operation control through a digital "touch" panel
- Automatic defrosting by hot gas
- Automatic evaporation of condensate water by means of a heat exchanger in copper
- Doors with automatic closing and a fixed opening position of 100°
- Hinges with automatic closing system
- Easily removable magnetic gaskets
- U-shaped guides and adjustable and extractable racks for grids
- Rounded internal corners for quick and easy cleaning
- Evaporator painted for cataphoresis with high corrosion resistance
- Internal Led lighting as standard
- 6 GN 2/1 polyethylene grids as standard
- Height-adjustable stainless steel feet
- Lock with key

OPTIONAL

- Stainless steel couple of "U" runners
- Stainless steel grid GN 2/1
- Polyethylene tray 600 x 400 mm
- Stainless steel grid 600 x 400 mm
- Couple "L" runners for grid 600 x 400 mm
- Kit 600 x 400 mm
- Set of 5 castors

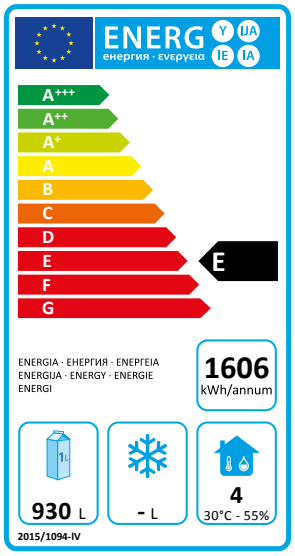

mod. CAB700PRTN | cod. 06203000

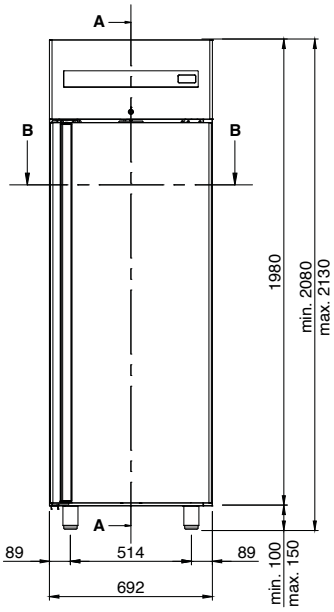

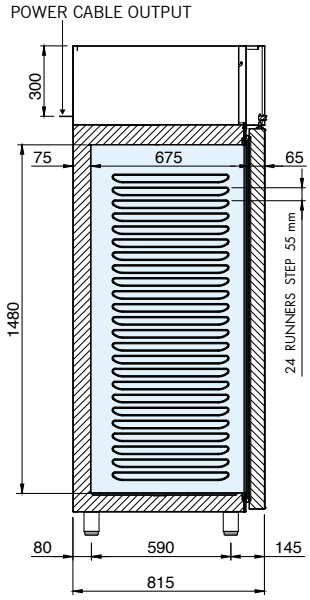

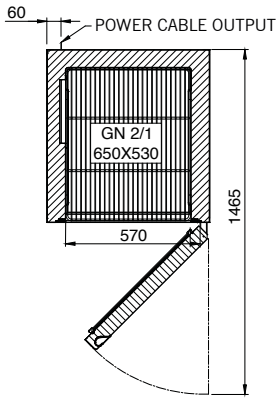

EN TECHNICAL SPECIFICATIONS

Available temperature (°C)	Dimensions W x D x H (mm)	Packaging dimensions W x D x H (mm)	Refrigerant gas	Net volum (L)	Climate class	Energy class	Power consumption (W)	Supply voltage	Annual consumption (kWh/year)
-2 / +10	692 x 815 x 2085	760 x 860 x 2240	R290	464	5	A	320	220-240 V / 50 Hz	322

EN TECHNICAL AND FUNCTIONAL FEATURES

- **Refrigerated cabinet with moulded guides**
- Monobloc unit that is tropicalized and easily removable from the body, with forced ventilated refrigeration with R290 gas
- Structure entirely in AISI 304 stainless steel
- Tested with external working environment temperatures up to 43 °C, efficiency equivalent to climate class 5
- 80 mm insulation of high pressure injected HFO polyurethane with a density of 42 kg/m³
- Temperature detection by means of a thermistor sensor (NTC probe)
- Operation control through a digital "touch" panel
- Automatic defrosting by hot gas
- Evaporation of condensation water by means of an anti-corrosion coil in AISI 316 low carbon
- Reversible opening doors with automatic closing and a fixed opening position of 100°
- Hinges with automatic closing system
- Easily removable seven-chamber magnetic gaskets
- Rounded internal corners for quick and easy cleaning
- Evaporator painted for cataphoresis with high corrosion resistance
- 3 GN 2/1 polyethylene grids as standard
- Height-adjustable stainless steel feet
- Lock with key and light placed under the control panel
- Internal air ducting on the left side
- Water drain via a hole in the bottom

OPTIONAL

- Polyethylene grids GN 2/1
- Stainless steel grids GN 2/1
- Set of 4 castors
- Door opening pedal

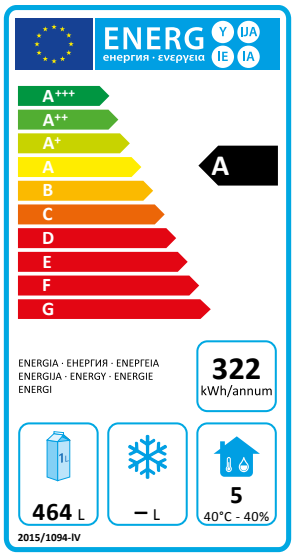

mod. CAB700PRBT | cod. 06203010

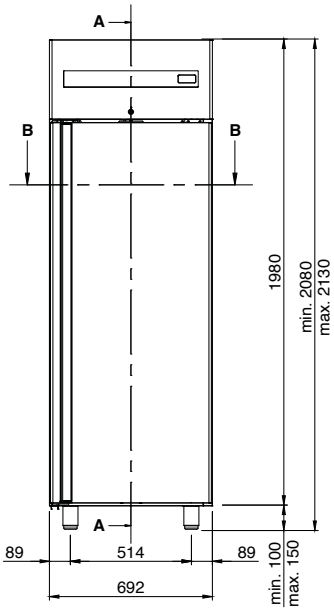

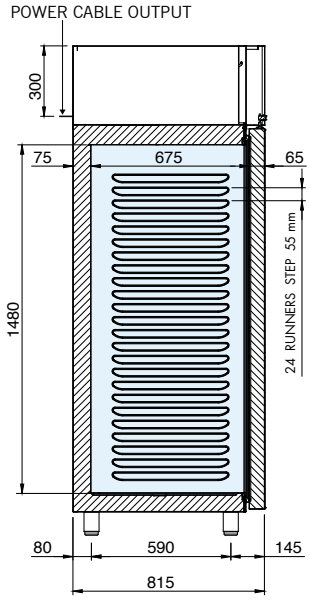

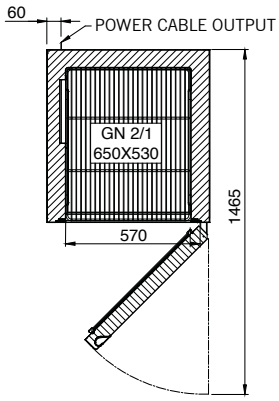

EN TECHNICAL SPECIFICATIONS

Available temperature (°C)	Dimensions W x D x H (mm)	Packaging dimensions W x D x H (mm)	Refrigerant gas	Net volum (L)	Climate class	Energy class	Power consumption (W)	Supply voltage	Annual consumption (kWh/year)
-18 / -22	692 x 815 x 2085	760 x 860 x 2240	R290	464	5	C	530	220-240 V / 50 Hz	1786

EN TECHNICAL AND FUNCTIONAL FEATURES

- **Refrigerated cabinet with moulded guides**
- Monobloc unit that is tropicalized and easily removable from the body, with forced ventilated refrigeration with R290 gas
- Structure entirely in AISI 304 stainless steel
- Tested with external working environment temperatures up to 43 °C, efficiency equivalent to climate class 5
- 80 mm insulation of high pressure injected HFO polyurethane with a density of 42 kg/m³
- Temperature detection by means of a thermistor sensor (NTC probe)
- Operation control through a digital "touch" panel
- Automatic defrosting by hot gas
- Evaporation of condensation water by means of an anti-corrosion coil in AISI 316 low carbon
- Reversible opening doors with automatic closing and a fixed opening position of 100°
- Hinges with automatic closing system
- Easily removable seven-chamber magnetic gaskets
- Rounded internal corners for quick and easy cleaning
- Evaporator painted for cataphoresis with high corrosion resistance
- 3 GN 2/1 polyethylene grids as standard
- Height-adjustable stainless steel feet
- Lock with key and light placed under the control panel
- Internal air ducting on the left side
- Water drain via a hole in the bottom

OPTIONAL

- Polyethylene grids GN 2/1
- Stainless steel grids GN 2/1
- Set of 4 castors
- Door opening pedal

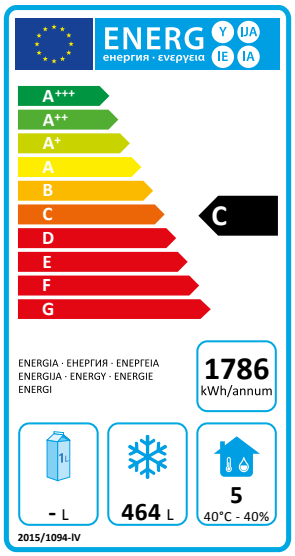

mod. CAB700-M | cod. 06200120

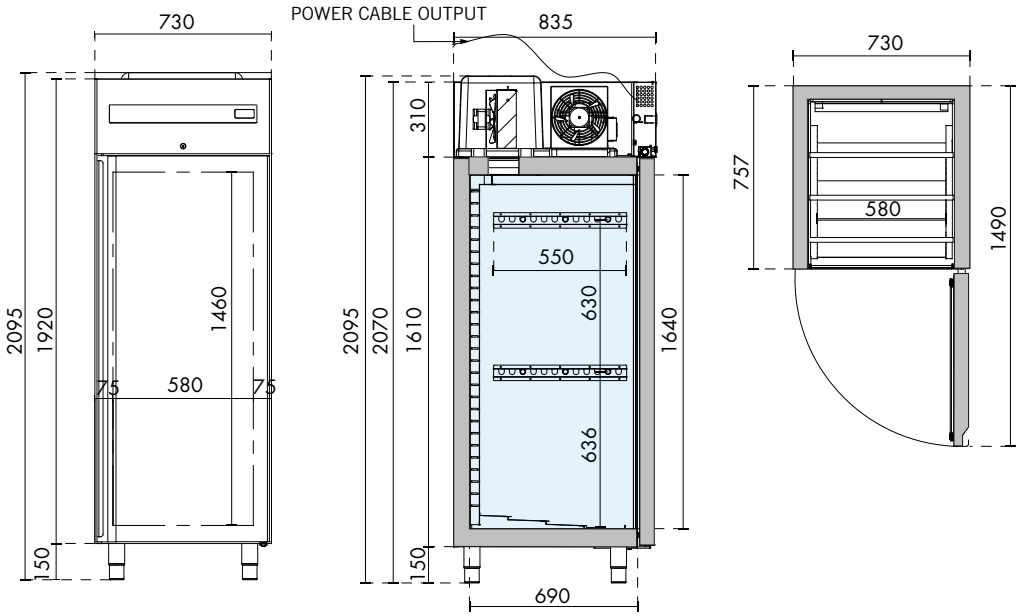

EN TECHNICAL SPECIFICATIONS

Available temperature (°C)	Dimensions W x D x H (mm)	Packaging dimensions W x D x H (mm)	Refrigerant gas	Net volum (L)	Climate class	Energy class	Power consumption (W)	Supply voltage	Annual consumption (kWh/year)
-2 / +8	730 x 835 x 2095	800 x 900 x 2300	R290	465	5	B	180	220-240 V / 50 Hz	402

EN TECHNICAL AND FUNCTIONAL FEATURES

- **Refrigerated cabinet for meat storage**
- Monobloc unit that is tropicalized and easily removable from the body, with forced ventilated refrigeration with R290 gas
- Structure entirely in steel. Interior, walls and door in AISI 304 stainless steel
- Tested with external working environment temperatures up to 43 °C, efficiency equivalent to climate class 5
- 75 mm insulation of high pressure injected HFO polyurethane with a density of 42 kg/m³
- Temperature detection by means of a thermistor sensor (NTC probe)
- Operation control through a digital "touch" panel
- Automatic defrosting by hot gas
- Automatic evaporation of condensate water by means of a heat exchanger in copper
- Reversible opening doors with automatic closing and a fixed opening position of 100°
- Hinges with automatic closing system
- Easily removable magnetic gaskets
- U-shaped guides and adjustable and extractable racks for grids
- Rounded internal corners for quick and easy cleaning
- Evaporator painted for cataphoresis with high corrosion resistance
- 6 standard hooks for meat
- Height-adjustable stainless steel feet
- Lock with key and light placed under the control panel

OPTIONAL

- Upper hook rack for meat
- Led light
- Set of 4 castors

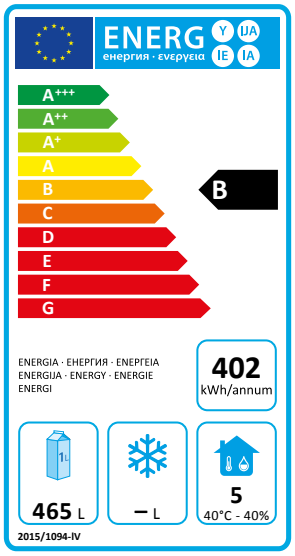

mod. CAB1400-M | cod. 06220060

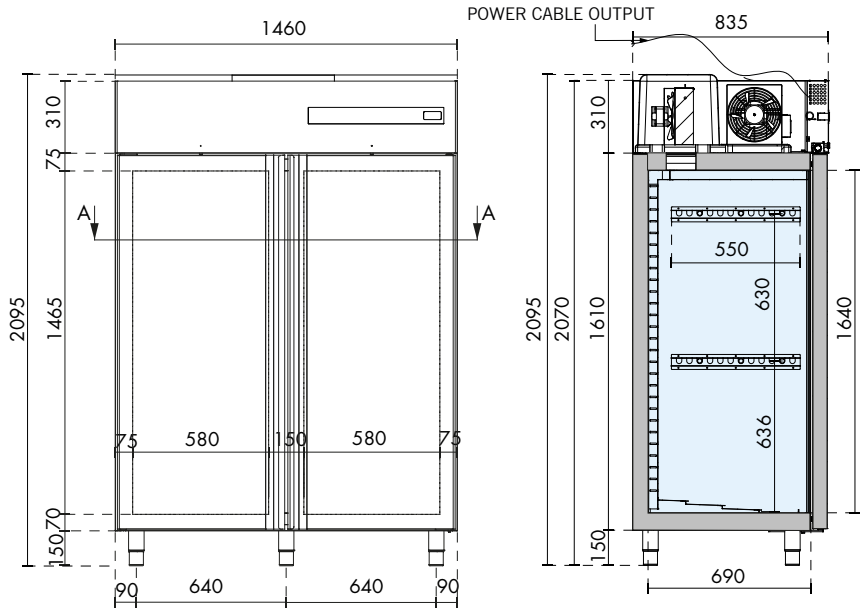

EN TECHNICAL SPECIFICATIONS

Available temperature (°C)	Dimensions W x D x H (mm)	Packaging dimensions W x D x H (mm)	Refrigerant gas	Net volum (L)	Climate class	Energy class	Power consumption (W)	Supply voltage	Annual consumption (kWh/year)
-2 / +8	1460 x 835 x 2095	1500 x 900 x 2300	R290	930	5	C	272	220-240 V / 50 Hz	949

EN TECHNICAL AND FUNCTIONAL FEATURES

- **Refrigerated cabinet for meat storage**
- Monobloc unit that is tropicalized and easily removable from the body, with forced ventilated refrigeration with R290 gas
- Structure entirely in steel. Interior, walls and door in AISI 304 stainless steel
- Tested with external working environment temperatures up to 43 °C, efficiency equivalent to climate class 5
- 75 mm insulation of high pressure injected HFO polyurethane with a density of 42 kg/m³
- Temperature detection by means of a thermistor sensor (NTC probe)
- Operation control through a digital "touch" panel
- Automatic defrosting by hot gas
- Automatic evaporation of condensate water by means of a heat exchanger in copper
- Doors with automatic closing and a fixed opening position of 100°
- Hinges with automatic closing system
- Easily removable magnetic gaskets
- U-shaped guides and adjustable and extractable racks for grids
- Rounded internal corners for quick and easy cleaning
- Evaporator painted for cataphoresis with high corrosion resistance
- 6 standard hooks for meat
- Height-adjustable stainless steel feet
- Lock with key and light placed under the control panel

OPTIONAL

- Upper hook rack for meat
- Led light
- Set of 4 castors

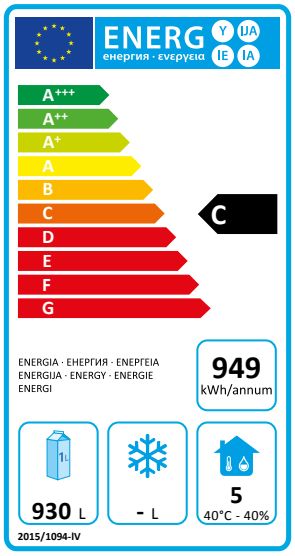

mod. CAB700TNTN | cod. 06200150

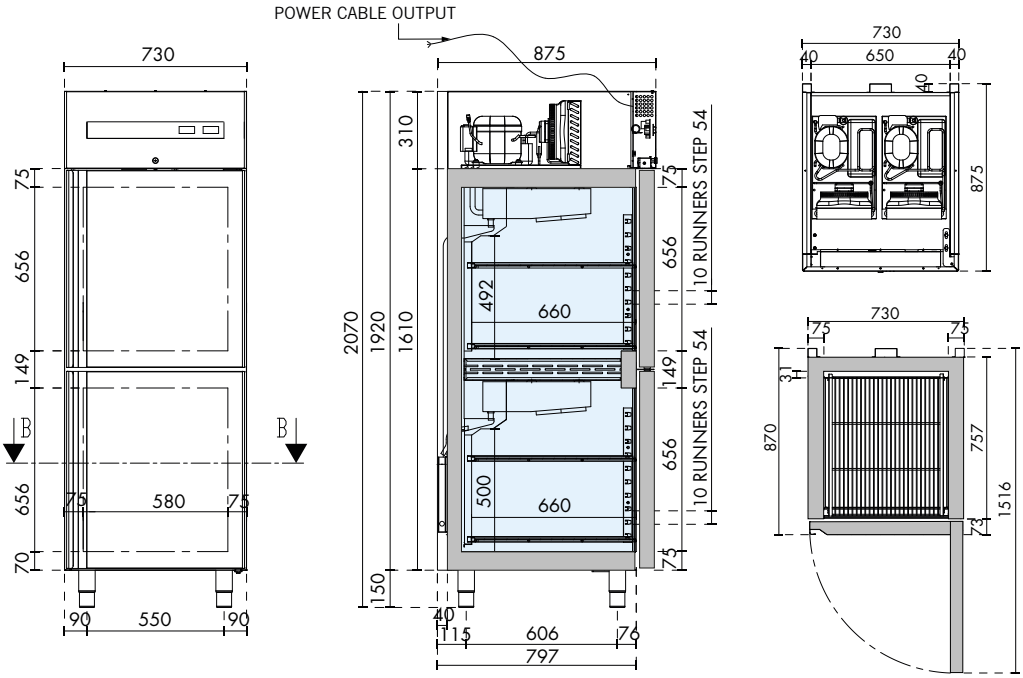

EN TECHNICAL SPECIFICATIONS

Available temperature (°C)	Dimensions W x D x H (mm)	Packaging dimensions W x D x H (mm)	Refrigerant gas	Net volum (L)	Climate class	Energy class	Power consumption (W)	Supply voltage	Annual consumption (kWh/year)
-2 / +8 -2 / +8	730 x 875 x 2070	800 x 900 x 2300	R290	148 148	5	D	200 200	220-240 V / 50 Hz	803

EN TECHNICAL AND FUNCTIONAL FEATURES

- **Combo refrigerated cabinet with two separate compartments**
- Forced ventilated refrigeration with R290 gas
- Structure entirely in steel. Interior, walls and door in AISI 304 stainless steel
- Tested with external working environment temperatures up to 43 °C, efficiency equivalent to climate class 5
- 75 mm insulation of high pressure injected HFO polyurethane with a density of 42 kg/m³
- Temperature detection by means of a thermistor sensor (NTC probe)
- Operation control through a digital "touch" panel
- Automatic defrosting with a resistance
- Automatic evaporation of condensate water by means of a heat exchanger in copper
- Doors with automatic closing and a fixed opening position of 100°
- Hinges with automatic closing system
- Easily removable magnetic gaskets
- U-shaped guides and adjustable and extractable racks for grids
- Rounded internal corners for quick and easy cleaning
- Evaporator painted for cataphoresis with high corrosion resistance
- 4 GN 2/1 polyethylene grids as standard
- Height-adjustable stainless steel feet
- Lock with key and light placed under the control panel

OPTIONAL

- Stainless steel couple of "U" runners
- Polyethylene grids GN 2/1
- Stainless steel grids GN 2/1
- Set of 4 castors

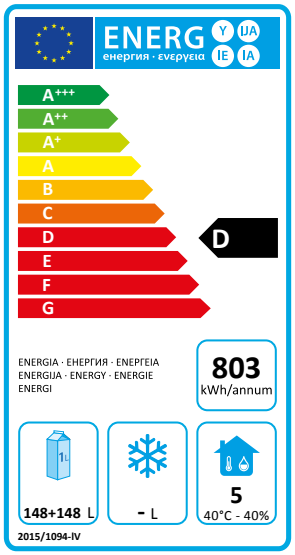

mod. CAB700TNBT | cod. 06200140

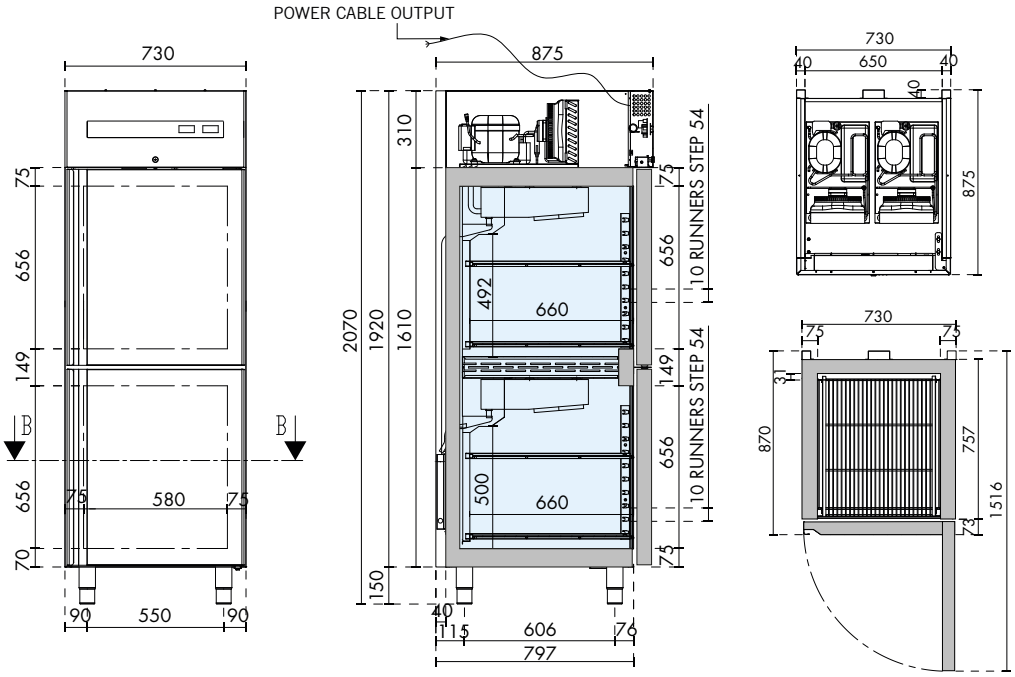

EN TECHNICAL SPECIFICATIONS

Available temperature (°C)	Dimensions W x D x H (mm)	Packaging dimensions W x D x H (mm)	Refrigerant gas	Net volum (L)	Climate class	Power consumption (W)	Supply voltage	Annual consumption (kWh/year)
-2 / +8 ❄ -18 / -22	730 x 875 x 2070	800 x 900 x 2300	R290	146 ❄ 148	5	200 ❄ 265	220-240 V / 50 Hz	2248

EN TECHNICAL AND FUNCTIONAL FEATURES

- **Combo refrigerated cabinet with two separate compartments**
- Compartment -2/+8°C: automatic evaporation of condensate water by means of a heat exchanger in copper
- Compartment -18/-22°C: automatic evaporation of condensation water by means of resistance
- Forced ventilated refrigeration with R290 gas
- Structure entirely in steel. Interior, walls and door in AISI 304 stainless steel
- Tested with external working environment temperatures up to 43 °C, efficiency equivalent to climate class 5
- 75 mm insulation of high pressure injected HFO polyurethane with a density of 42 kg/m^3
- Temperature detection by means of a thermistor sensor (NTC probe)
- Operation control through a digital "touch" panel
- Automatic defrosting with a resistance
- Doors with automatic closing and a fixed opening position of 100°
- Hinges with automatic closing system
- Easily removable magnetic gaskets
- U-shaped guides and adjustable and extractable racks for grids
- Rounded internal corners for quick and easy cleaning
- Evaporator painted for cataphoresis with high corrosion resistance
- 4 GN 2/1 polyethylene grids as standard
- Height-adjustable stainless steel feet
- Lock with key and light placed under the control panel

OPTIONAL

- Stainless steel couple of "U" runners
- Polyethylene grids GN 2/1
- Stainless steel grids GN 2/1
- Set of 4 castors

mod. CAB1400TNTN | cod. 06220080

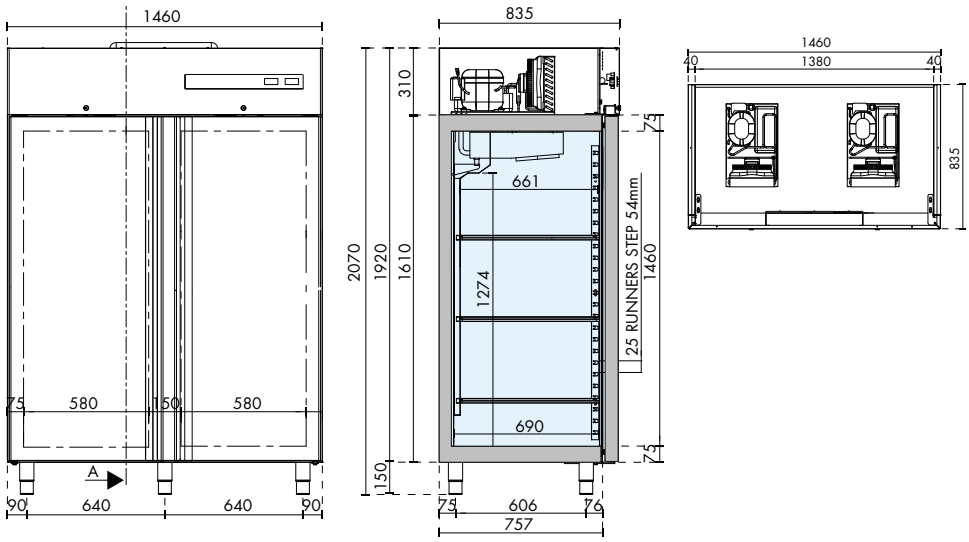

EN TECHNICAL SPECIFICATIONS

Available temperature (°C)	Dimensions W x D x H (mm)	Packaging dimensions W x D x H (mm)	Refrigerant gas	Net volum (L)	Climate class	Energy class	Power consumption (W)	Supply voltage	Annual consumption (kWh/year)
-2 / +8 -2 / +8	1460 x 875 x 2070	1500 x 900 x 2300	R290	465 465	5	C	180 180	220-240 V / 50 Hz	876

EN TECHNICAL AND FUNCTIONAL FEATURES

- **Combo refrigerated cabinet with two separate compartments**
- Two monoblocks units that is tropicalized and easily removable from the body, with forced ventilated refrigeration with R290 gas
- Structure entirely in steel. Interior, walls and door in AISI 304 stainless steel
- Tested with external working environment temperatures up to 43 °C, efficiency equivalent to climate class 5
- 75 mm insulation of high pressure injected HFO polyurethane with a density of 42 kg/m³
- Temperature detection by means of a thermistor sensor (NTC probe)
- Operation control through a digital "touch" panel
- Automatic defrosting by hot gas
- Automatic evaporation of condensate water by means of a heat exchanger in copper
- Doors with automatic closing and a fixed opening position of 100°
- Hinges with automatic closing system
- Easily removable magnetic gaskets
- U-shaped guides and adjustable and extractable racks for grids
- Rounded internal corners for quick and easy cleaning
- Evaporator painted for cataphoresis with high corrosion resistance
- 6 GN 2/1 polyethylene grids as standard
- Height-adjustable stainless steel feet
- Lock with key and light placed under the control panel

OPTIONAL

- Stainless steel couple of "U" runners
- Polyethylene grids GN 2/1
- Stainless steel grids GN 2/1
- Set of 4 castors

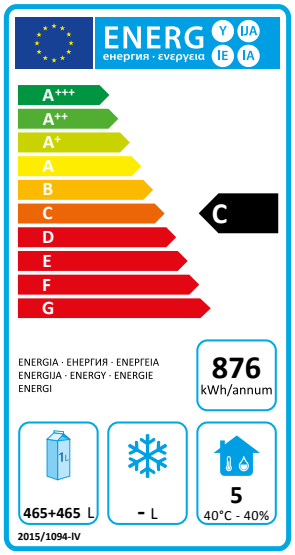

mod. CAB1400TNBT | cod. 06220070

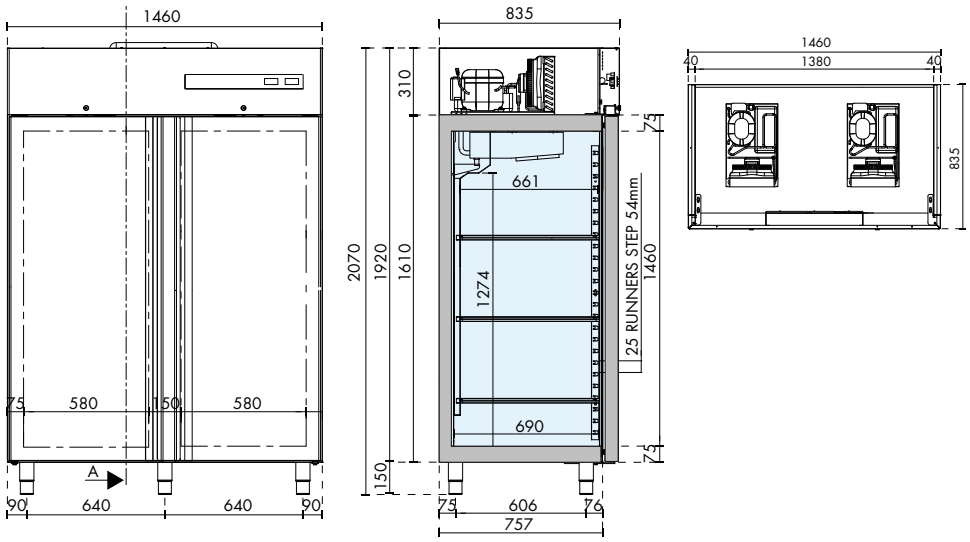

EN TECHNICAL SPECIFICATIONS

Available temperature (°C)	Dimensions W x D x H (mm)	Packaging dimensions W x D x H (mm)	Refrigerant gas	Net volum (L)	Climate class	Power consumption (W)	Supply voltage	Annual consumption (kWh/year)
-2 / +8 ❄ -18 / -22	1460 x 875 x 2070	1500 x 900 x 2300	R290	465 ❄ 465	5	180 ❄ 365	220-240 V / 50 Hz	2519

EN TECHNICAL AND FUNCTIONAL FEATURES

- **Combo refrigerated cabinet with two separate compartments**
- Left compartment -2/+8°C and right compartment -18/-22°C
- Two monoblocks units that is tropicalized and easily removable from the body, with forced ventilated refrigeration with R290 gas
- Structure entirely in steel. Interior, walls and door in AISI 304 stainless steel
- Tested with external working environment temperatures up to 43 °C, efficiency equivalent to climate class 5
- 75 mm insulation of high pressure injected HFO polyurethane with a density of 42 kg/m^3
- Temperature detection by means of a thermistor sensor (NTC probe)
- Operation control through a digital "touch" panel
- Automatic defrosting by hot gas
- Automatic evaporation of condensate water by means of a heat exchanger in copper
- Doors with automatic closing and a fixed opening position of 100°
- Hinges with automatic closing system
- Easily removable magnetic gaskets
- U-shaped guides and adjustable and extractable racks for grids
- Rounded internal corners for quick and easy cleaning
- Evaporator painted for cataphoresis with high corrosion resistance
- 6 GN 2/1 polyethylene grids as standard
- Height-adjustable stainless steel feet
- Lock with key and light placed under the control panel

OPTIONAL

- Stainless steel couple of "U" runners
- Polyethylene grids GN 2/1
- Stainless steel grids GN 2/1
- Set of 4 castors

mod. CAB700-F | cod. 06200130

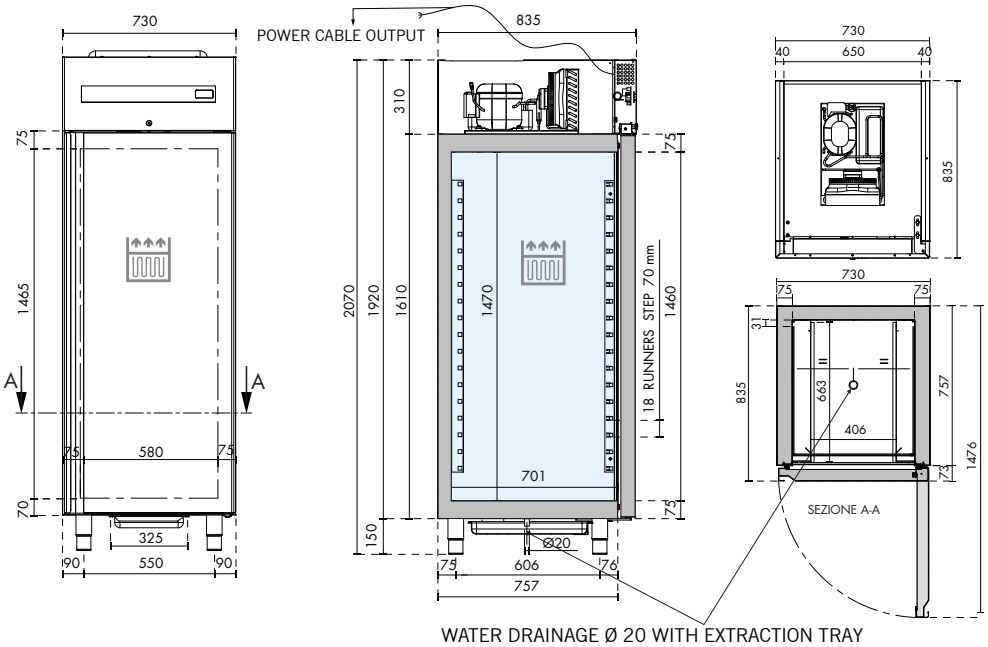

EN TECHNICAL SPECIFICATIONS

Available temperature (°C)	Dimensions W x D x H (mm)	Packaging dimensions W x D x H (mm)	Refrigerant gas	Net volum (L)	Climate class	Power consumption (W)	Supply voltage
-5 / +8	730 x 835 x 2070	800 x 900 x 2300	R290	297	5	180	220-240 V / 50 Hz

EN TECHNICAL AND FUNCTIONAL FEATURES

- **Refrigerated cabinet for fish storage**
- Static refrigeration by means of a coil integrated in the rear and lateral insulation, operating with R290 gas
- Structure entirely in steel. Interior, walls and door in AISI 304 stainless steel
- Tested with external working environment temperatures up to 43 °C, efficiency equivalent to climate class 5
- 75 mm insulation of high pressure injected HFO polyurethane with a density of 42 kg/m^3
- Temperature detection by means of a thermistor sensor (NTC probe)
- Operation control through a digital "touch" panel
- Automatic defrosting when the compressor stops
- Tray to collect condensation water drained via a central hole with external siphon
- Reversible opening doors with automatic closing and a fixed opening position of 100°
- Hinges with automatic closing system
- Easily removable magnetic gaskets
- Rounded internal corners for quick and easy cleaning
- Evaporator painted for cataphoresis with high corrosion resistance
- 6 pairs of L-shaped stainless steel guides for 600 x 400 mm shelves as standard
- Height-adjustable stainless steel feet
- Lock with key and light placed under the control panel

OPTIONAL

- 600 x 400 x h 130 polyethylene tray
- 600 x 400 x h 70 polyethylene tray
- Stainless steel grids 600 x 400 mm
- Couple "L" runners for grids 600 x 400 mm
- Led light
- Set of 4 castors

mod. RPC1000 | cod. 06270010

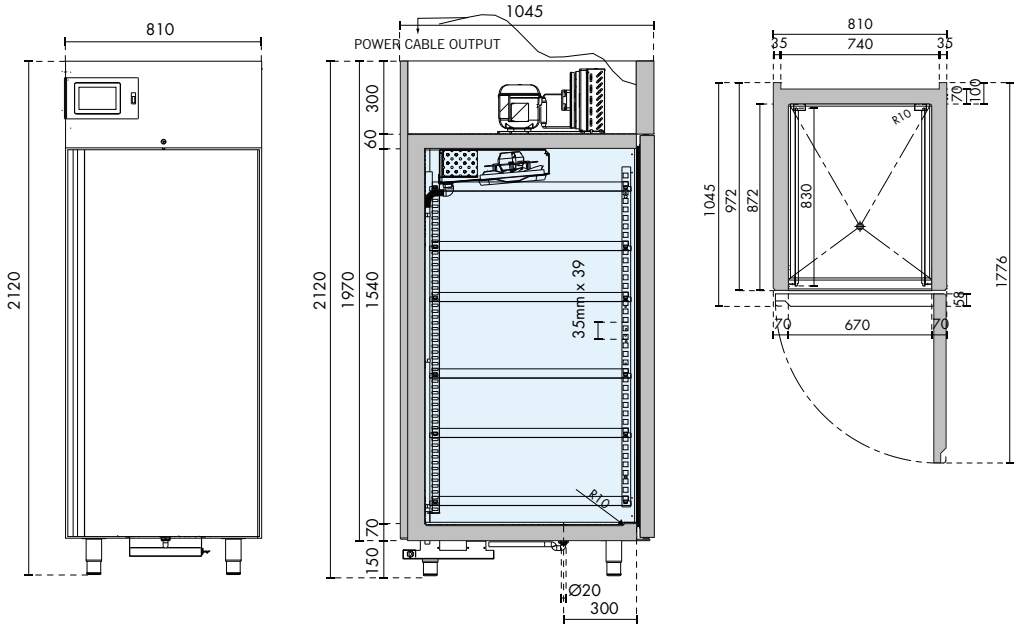

EN TECHNICAL SPECIFICATIONS

Available temperature (°C)	Dimensions W x D x H (mm)	Packaging dimensions W x D x H (mm)	Refrigerant gas	Net volum (L)	Climate class	Power consumption (W)	Supply voltage
-6 / +40	810 x 1045 x 2120	910 x 1150 x 2400	R452A	566	5	1660	220-240 V / 50 Hz

EN TECHNICAL AND FUNCTIONAL FEATURES

- **Retarder prover**
- Forced ventilated refrigeration with R452A gas
- Structure entirely in steel. Interior, walls and door in AISI 304 stainless steel
- Tested with external working environment temperatures up to 43°C, efficiency equivalent to climate class 5
- 70 mm insulation of high pressure injected HFO polyurethane with a density of 42 kg/m^3
- Temperature detection by means of a thermistor sensor (NTC probe)
- Humidity detection by means of a probe
- 7" Touch Display control panel
- Temperature, humidity and fan adjustment (10 different speeds)
- Automatic defrosting with resistance
- Automatic evaporation of condensation water by means of resistance
- Reversible opening doors with automatic closing and a fixed opening position of 100°
- Hinges with automatic closing system
- Easily removable magnetic gaskets
- Rounded internal corners for quick and easy cleaning
- Stainless steel evaporator with high corrosion resistance
- 18 pairs of L-shaped stainless steel guides for 600 x 800 mm shelves as standard
- Height-adjustable stainless steel feet
- Lock with key and light placed under the control panel

OPTIONAL

- Aluminized steel tray 600 x 400 x h 20
- Aluminized steel tray 600 x 400 x h 30
- Aluminized steel tray 600 x 400 x h 40
- Aluminized steel tray 600 x 400 x h 50
- Couple "L" runners for grid 600 x 800 mm

mod. RPC700 | cod. 06270000

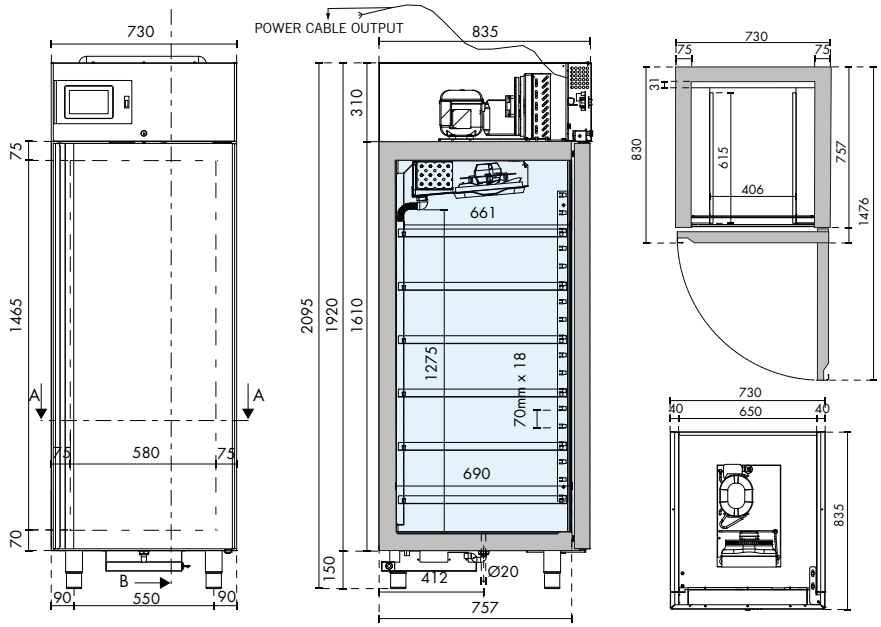

EN TECHNICAL SPECIFICATIONS

Available temperature (°C)	Dimensions W x D x H (mm)	Packaging dimensions W x D x H (mm)	Refrigerant gas	Net volum (L)	Climate class	Power consumption (W)	Supply voltage
-6 / +40	730 x 835 x 2095	800 x 900 x 2300	R452A	305	5	1660	220-240 V / 50 Hz

EN TECHNICAL AND FUNCTIONAL FEATURES

- **Retarder prover**
- Forced ventilated refrigeration with R452A gas
- Structure entirely in steel. Interior, walls and door in AISI 304 stainless steel
- Tested with external working environment temperatures up to 43°C, efficiency equivalent to climate class 5
- 75 mm insulation of high pressure injected HFO polyurethane with a density of 42 kg/m³
- Temperature detection by means of a thermistor sensor (NTC probe)
- Humidity detection by means of a probe
- 7" Touch Display control panel
- Temperature, humidity and fan adjustment (10 different speeds)
- Automatic defrosting with resistance
- Automatic evaporation of condensation water by means of resistance
- Reversible opening doors with automatic closing and a fixed opening position of 100°
- Hinges with automatic closing system
- Easily removable magnetic gaskets
- Rounded internal corners for quick and easy cleaning
- Stainless steel evaporator with high corrosion resistance
- 18 pairs of L-shaped stainless steel guides for 600 x 400 mm shelves as standard
- Height-adjustable stainless steel feet
- Lock with key and light placed under the control panel

OPTIONAL

- Aluminized steel tray 600 x 400 x h 20
- Aluminized steel tray 600 x 400 x h 30
- Aluminized steel tray 600 x 400 x h 40
- Aluminized steel tray 600 x 400 x h 50
- Couple "L" runners for grid 600 x 400 mm

mod. CAB600TN | cod. 06210000

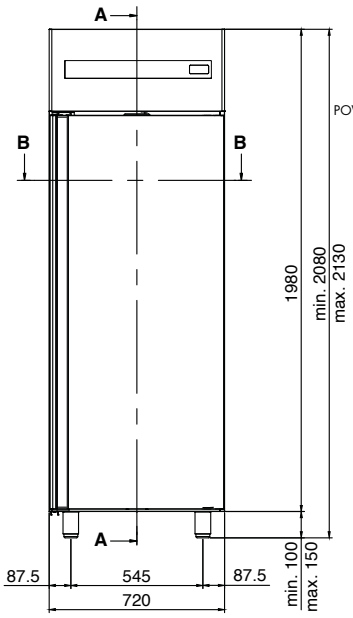

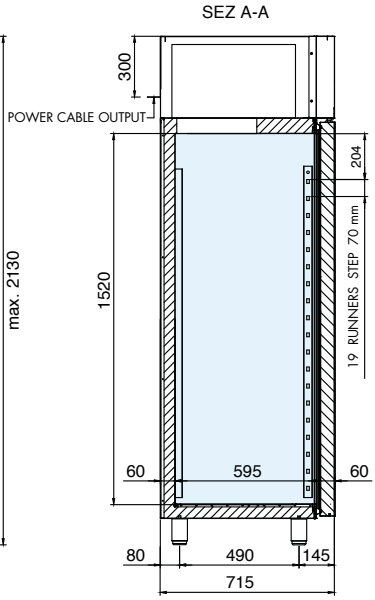

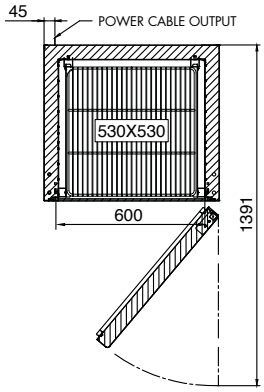

EN TECHNICAL SPECIFICATIONS

Available temperature (°C)	Dimensions W x D x H (mm)	Packaging dimensions W x D x H (mm)	Refrigerant gas	Net volum (L)	Climate class	Energy class	Power consumption (W)	Supply voltage	Annual consumption (kWh/year)
-2 / +10	720 x 715 x 2085	760 x 760 x 2240	R290	399	5	B	320	220-240 V / 50 Hz	385

EN TECHNICAL AND FUNCTIONAL FEATURES

- Refrigerated cabinet equipped with a monobloc unit that is tropicalized and easily removable from the body, with forced ventilated refrigeration with R290 gas
- Structure entirely in steel. Interior, walls and door in AISI 304 stainless steel
- Tested with external working environment temperatures up to 43 °C, efficiency equivalent to climate class 5
- 60 mm insulation of high pressure injected HFO polyurethane with a density of 42 kg/m³
- Temperature detection by means of a thermistor sensor (NTC probe)
- Operation control through a digital "touch" panel
- Automatic defrosting with an electric resistance
- Evaporation of condensation water by means of an anti-corrosion coil in AISI 316 low carbon
- Reversible opening doors with automatic closing and a fixed opening position of 100°
- Hinges with automatic closing system
- Easily removable triple-chamber magnetic gasket
- U-shaped guides and adjustable and extractable racks for grids
- Rounded internal corners for quick and easy cleaning
- Evaporator painted for cataphoresis with high corrosion resistance
- 3 grids 530 x 530 mm as standard
- Height-adjustable stainless steel feet
- Lock with key and light placed under the control panel

OPTIONAL

- Stainless steel grids 530 x 530 mm
- Polyethylene grids 530 x 530 mm
- Stainless steel couple of runners "U"
- Stainless steel couple of runners "L"
- Set of 4 castors
- Door opening pedal
- Led light
- Wi-Fi Kit

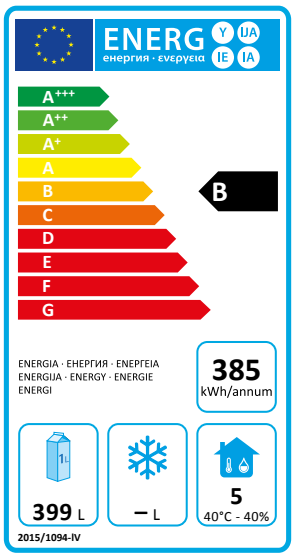

mod. CAB600BT | cod. 06210010

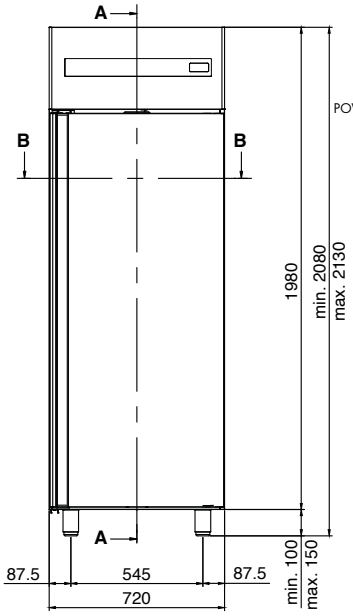

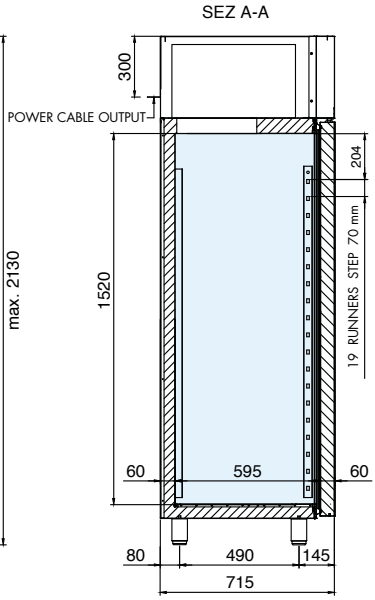

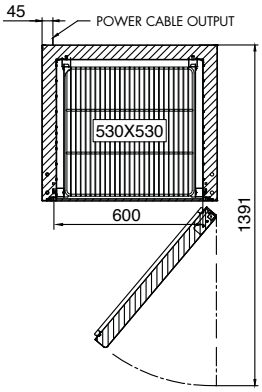

EN TECHNICAL SPECIFICATIONS

Available temperature (°C)	Dimensions W x D x H (mm)	Packaging dimensions W x D x H (mm)	Refrigerant gas	Net volum (L)	Climate class	Energy class	Power consumption (W)	Supply voltage	Annual consumption (kWh/year)
-18 / -22	720 x 715 x 2085	760 x 760 x 2240	R290	399	5	C	530	220-240 V / 50 Hz	1702

EN TECHNICAL AND FUNCTIONAL FEATURES

- Refrigerated cabinet equipped with a monobloc unit that is tropicalized and easily removable from the body, with forced ventilated refrigeration with R290 gas
- Structure entirely in steel. Interior, walls and door in AISI 304 stainless steel
- Tested with external working environment temperatures up to 43 °C, efficiency equivalent to climate class 5
- 60 mm insulation of high pressure injected HFO polyurethane with a density of 42 kg/m^3
- Temperature detection by means of a thermistor sensor (NTC probe)
- Operation control through a digital "touch" panel
- Automatic defrosting with an electric resistance
- Evaporation of condensation water by means of an anti-corrosion coil in AISI 316 low carbon
- Reversible opening doors with automatic closing and a fixed opening position of 100°
- Hinges with automatic closing system
- Easily removable triple-chamber magnetic gasket
- U-shaped guides and adjustable and extractable racks for grids
- Rounded internal corners for quick and easy cleaning
- Evaporator painted for cataphoresis with high corrosion resistance
- 3 grids 530 x 530 mm as standard
- Height-adjustable stainless steel feet
- Lock with key and light placed under the control panel

OPTIONAL

- Stainless steel grids 530 x 530 mm
- Polyethylene grids 530 x 530 mm
- Stainless steel couple of runners "U"
- Stainless steel couple of runners "L"
- Set of 4 castors
- Door opening pedal
- Led light
- Wi-Fi Kit

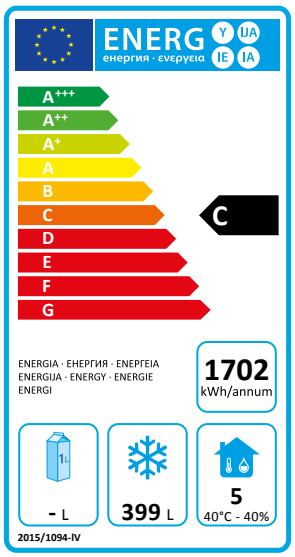

mod. CAB1200TN | cod. 06300000

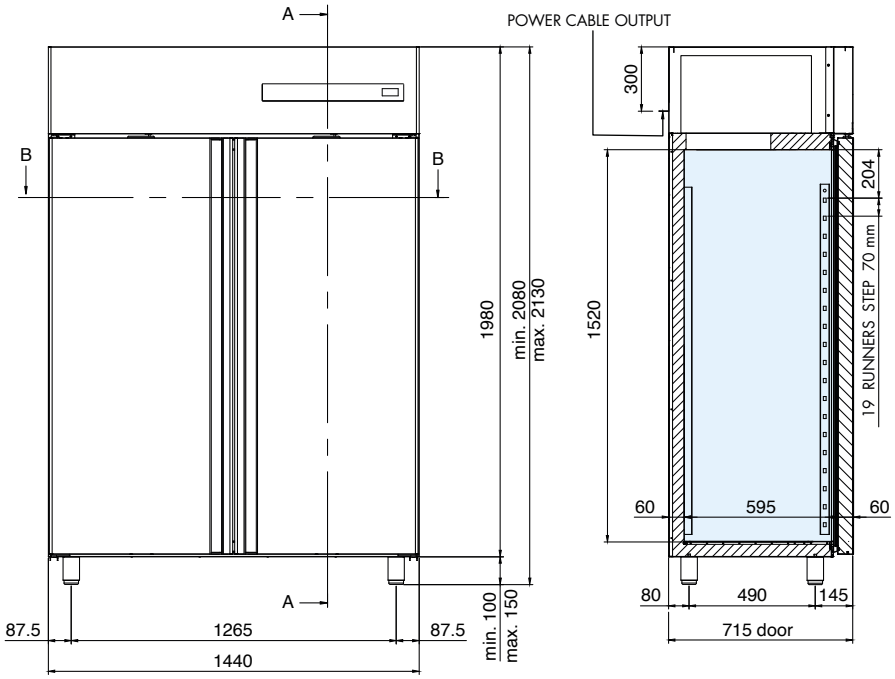

EN TECHNICAL SPECIFICATIONS

Available temperature (°C)	Dimensions W x D x H (mm)	Packaging dimensions W x D x H (mm)	Refrigerant gas	Net volum (L)	Climate class	Energy class	Power consumption (W)	Supply voltage	Annual consumption (kWh/year)
-2 / +10	1440 x 715 x 2085	1460 x 760 x 2240	R290	776	5	C	580	220-240 V / 50 Hz	863

EN TECHNICAL AND FUNCTIONAL FEATURES

- Refrigerated cabinet equipped with a monobloc unit that is tropicalized and easily removable from the body, with forced ventilated refrigeration with R290 gas
- Structure entirely in steel. Interior, walls and door in AISI 304 stainless steel
- Tested with external working environment temperatures up to 43 °C, efficiency equivalent to climate class 5
- 60 mm insulation of high pressure injected HFO polyurethane with a density of 42 kg/m^3
- Temperature detection by means of a thermistor sensor (NTC probe)
- Operation control through a digital "touch" panel
- Automatic defrosting with an electric resistance
- Evaporation of condensation water by means of an anti-corrosion coil in AISI 316 low carbon
- Doors with automatic closing and a fixed opening position of 100°
- Hinges with automatic closing system
- Easily removable triple-chamber magnetic gasket
- U-shaped guides and adjustable and extractable racks for grids
- Rounded internal corners for quick and easy cleaning
- Evaporator painted for cataphoresis with high corrosion resistance
- 6 grids 530 x 530 mm as standard
- Height-adjustable stainless steel feet
- Lock with key and light placed under the control panel

OPTIONAL

- Stainless steel grids 530 x 530 mm
- Polyethylene grids 530 x 530 mm
- Stainless steel couple of runners "U"
- Stainless steel couple of runners "L"
- Set of 4 castors
- Door opening pedal
- Led light
- Wi-Fi Kit

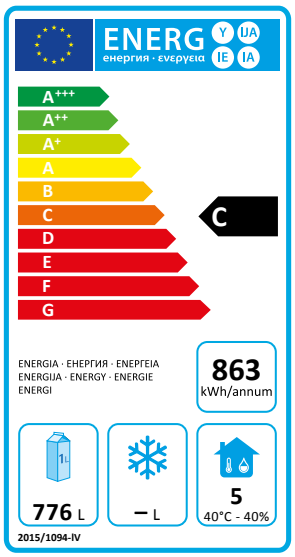

mod. CAB1200BT | cod. 06300010

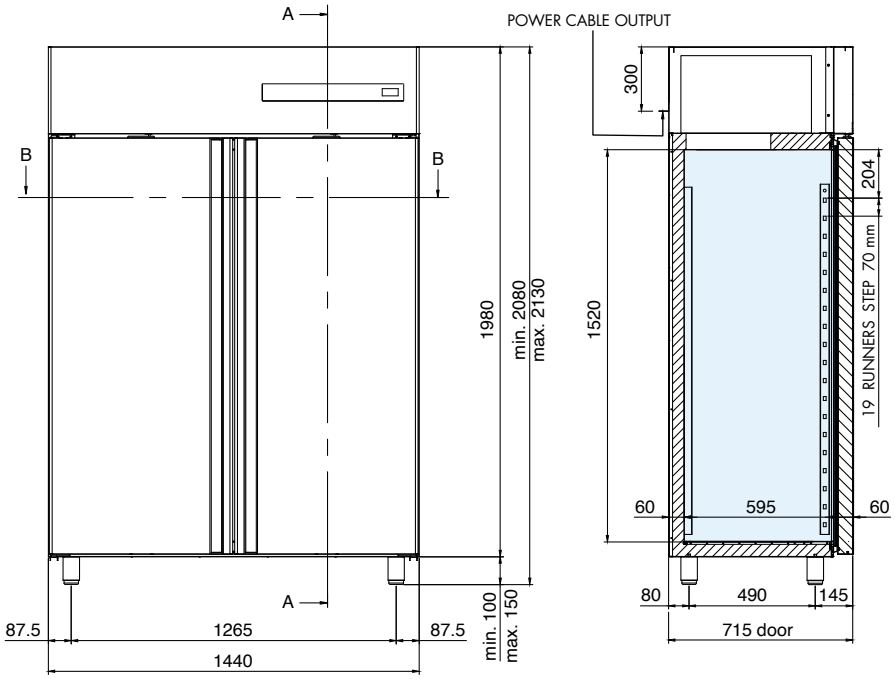

EN TECHNICAL SPECIFICATIONS

Available temperature (°C)	Dimensions W x D x H (mm)	Packaging dimensions W x D x H (mm)	Refrigerant gas	Net volum (L)	Climate class	Energy class	Power consumption (W)	Supply voltage	Annual consumption (kWh/year)
-18 / -22	1440 x 715 x 2085	1460 x 760 x 2240	R290	776	5	D	700	220-240 V / 50 Hz	3689

EN TECHNICAL AND FUNCTIONAL FEATURES

- Refrigerated cabinet equipped with a monobloc unit that is tropicalized and easily removable from the body, with forced ventilated refrigeration with R290 gas
- Structure entirely in steel. Interior, walls and door in AISI 304 stainless steel
- Tested with external working environment temperatures up to 43 °C, efficiency equivalent to climate class 5
- 60 mm insulation of high pressure injected HFO polyurethane with a density of 42 kg/m^3
- Temperature detection by means of a thermistor sensor (NTC probe)
- Operation control through a digital "touch" panel
- Automatic defrosting with an electric resistance
- Evaporation of condensation water by means of an anti-corrosion coil in AISI 316 low carbon
- Doors with automatic closing and a fixed opening position of 100°
- Hinges with automatic closing system
- Easily removable triple-chamber magnetic gasket
- U-shaped guides and adjustable and extractable racks for grids
- Rounded internal corners for quick and easy cleaning
- Evaporator painted for cataphoresis with high corrosion resistance
- 6 grids 530 x 530 mm as standard
- Height-adjustable stainless steel feet
- Lock with key and light placed under the control panel

OPTIONAL
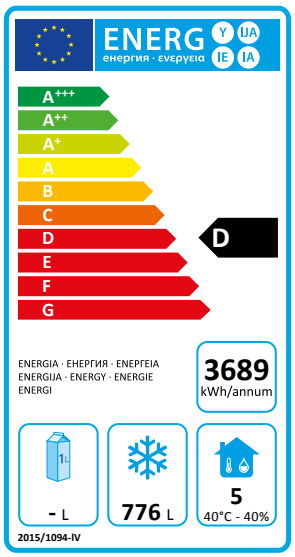
- Stainless steel grids 530 x 530 mm
- Polyethylene grids 530 x 530 mm
- Stainless steel couple of runners "U"
- Stainless steel couple of runners "L"
- Set of 4 castors
- Door opening pedal
- Led light
- Wi-Fi Kit